AMPAK Technology Inc.

正基科技股份有限公司

SPECIFICATION

PRODUCT NAME：AP6275HH3

REVISION：1.8(WEB)

DATE：May. 20th , 2026

Customer APPROVED	
Company	
Representative Signature	

PREPARED	REVIEW			APPROVED	DCC ISSUE
	PM	QA	ET		

正基科技股份有限公司

AMPAK Technology Inc.

AP6275HH3

Data Sheet

Address:
3F., No.15-1, Zhonghua Rd., Hukou Township, Hsinchu County, Taiwan, 30352
Website:
http://www.ampak.com.tw

Revision

Revision	Date	Description	Revised By
0.1	2020/10/26	- Official release	Ali
0.2	2020/11/13	-2.2.1 Absolute Maximum Ratings - 2.2 .2 Recommended Operating Rating - 3.1 2.4GHz RF Specification - 3.2 5GHz RF Specification - 5.2 Pin Assignment	Ali
1.0	2021/11/25	- 3.1 2.4GHz RF Specification	Ali
1.1	2022/03/20	- Modify 2.2.2Recommended Operating Rating	Ali
1.2	2022/05/06	- Modify 3.2 5GHz RF Specification	Ali
1.3	2022/06/02	- Modify 4.1 Bluetooth RF Specification	Ali
1.4	2022/08/30	- Modify 10. Package Information	Ali
1.5	2022/09/13	- Modify 2.4GHz RF Specification; tolerance +/2dB	Ali
1.6	2023/09/21	- Update Bluetooth specification to 5.3	Ali
1.7	2023/12/01	- Update -2.2.1 Absolute Maximum Ratings	Ali
1.8	2026/05/20	--Delete 802.11a MIMO RX	Sam

Contents

1. Introduction 2
1.1 Overview 2
1.2 Product Features 3
2. General Specification 4
2.1 General Specification 4
2.2 DC Characteristics 4
2.2.1 Absolute Maximum Ratings 4
2.2.2 Recommended Operating Rating 4
The module requires three power supplies: VBAT and VBATFEM and VDDIO. 5
The module requires two power supplies: other Digital I/O Pins. 5
3. Wi-Fi RF Specification 6
3.1 2.4GHz RF Specification 6
3.2 5GHz RF Specification 8
4. Bluetooth Specification 14
4.1 Bluetooth Specification 14
5. Pin Definition 16
5.1 Pin Outline 16
5.2 Pin Assignment 16
6. Dimensions 19
6.1 Module Dimensions 19
6.2 Recommended footprint 20
7. External clock reference 21
8. Host Interface Timing Diagram 22
8.1 Reset and Startup Control Signal Sequencing 22
8.2 PCIe Interface Description 24
8.3 PCM Interface Description 27
8.4 UART Interface Description 31
9. Recommended Reflow Profile 32
10. Package Information 33
10.1 Label 33
10.2 Dimension 34
10.3 MSL Level / Storage Condition 335

1. Introduction

1.1 Overview

The AMPAK Technology® AP6275HH3 is a fully Wi-Fi and Bluetooth functionalities module with seamless roaming capabilities and advance security, also it could interact with different vendors' 802.11a/b/g/n/ac/ax 2x2 Access Points with MIMO standard and Data rate of up to 1200 Mbps during single-band operation and 1430 Mbps in RSDB mode, with dual-stream in 802.11ax to connect the wireless LAN. Furthermore AP6275HH3 included PCIe interface for Wi-Fi, UART/ PCM interface for Bluetooth.

In addition, this compact module is a total solution for a combination of Wi-Fi + BT technologies. The module is specifically developed for tablet, OTT box and portable devices.

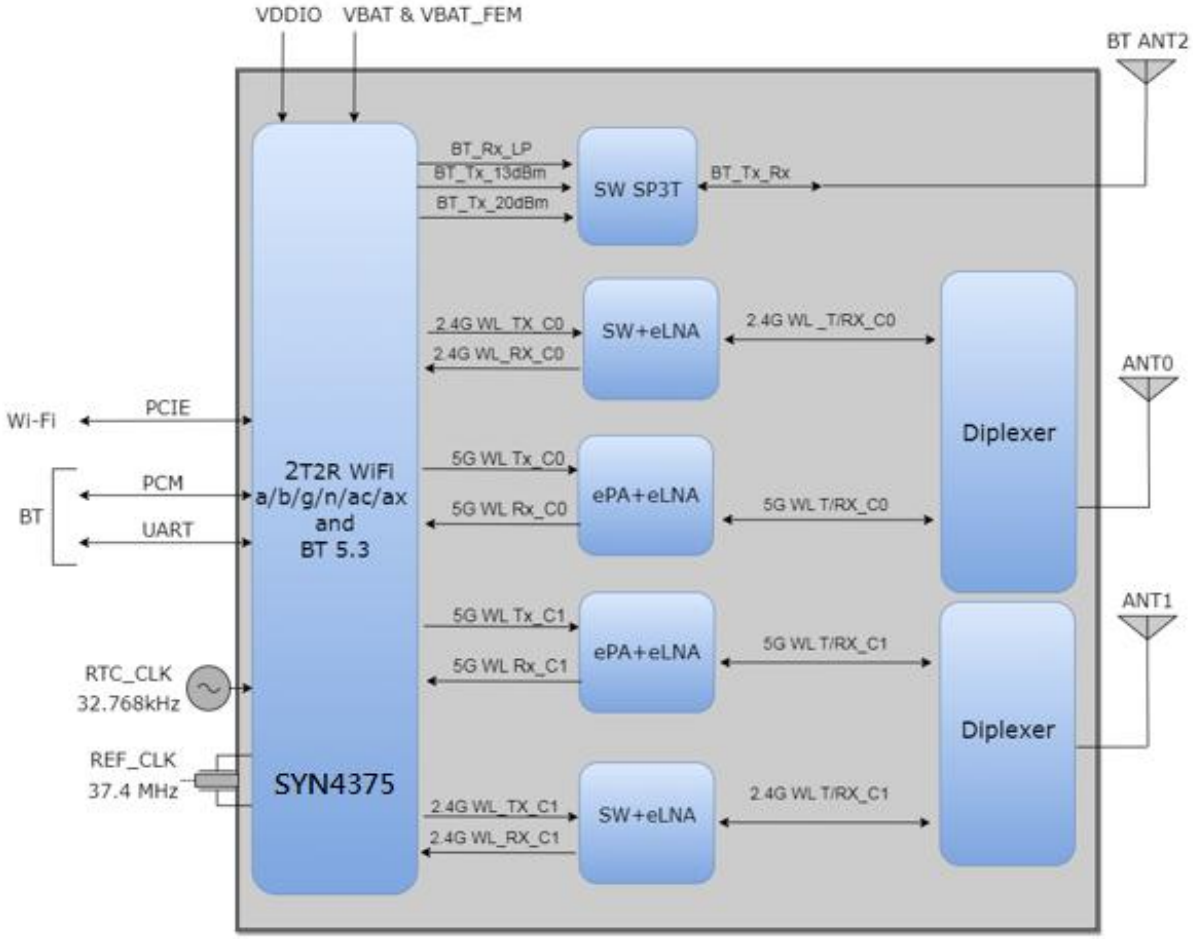

1.2 Product Features

- Lead Free design which is compliant with ROHS requirements.
- TX and RX low-density parity check (LDPC) support for improved range and power efficiency.
- IEEE 802.11ax draft compliant.
- Data rate of up to 1200 Mbps during single-band operation and 1430 Mbps in RSDB mode.
- 20/40/80 MHz channels for the main (Main) 2×2 WLAN core (1024-QAM modulation), and 20 MHz channels for the auxiliary (Aux) 2×2 WLAN core (256-QAMmodulation).
- Full IEEE 802.11a/b/g/n/ac legacy compatibility with enhanced performance.
- Zero wait dynamic frequency selection (DFS): background channel availability check (CAC) scan for immediate switch to candidate DFS channel.
- Supports 3 antennas with two for WLAN RF ports and one Bluetooth RF port..
    - Supports PCI express revision 3.0 and power management running at Gen2 speeds.

- BT host digital interface:
    - HCI UART (up to 4 Mbps)
    - PCM for audio data
- Complies with Bluetooth Core Specification Version 5.3 with provisions for supporting future specifications. With Bluetooth Class 1 or Class2 transmitter operation.
- Bluetooth 5.3 including Low-Energy Long Range (LELR)
- Supports extended synchronous connections (eSCO), for enhanced voice quality by allowing for retransmission of dropped packets.
- Adaptive frequency hopping (AFH) for reducing radio frequency interference.

A simplified block diagram of the module is depicted in the figure above.

2. General Specification

2.1 General Specification

Model Name	AP6275HH3
Product Description	2T2R 802.11 ax/ac/a/b/g/n Wi-Fi + BT 5.3 Module
Dimension	L x W: 24 x 24(typical) mm H: 2.1(Maximum) mm
WiFi Interface	Support PCIe v3.0 compliant and runs at Gen2 speeds.
BT Interface	UART / PCM
Operating temperature	-30°C to 85°C
Storage temperature	-40°C to 85°C
Humidity	Operating Humidity 10% to 95% Non-Condensing

Note: The optimal RF performance specified in the data sheet, however, is guaranteed only -10 °C to +55 °C and 3.3V < VBAT < 4.6V without derating performance.

2.2 DC Characteristics

2.2.1 Absolute Maximum Ratings

Symbol	Description	Min.	Max.	Unit
VBAT	IC Input supply Voltage	-0.5	5	V
VDDIO	Digital/ Bluetooth/ I/O Voltage	-0.5	2.07	V
VBATFEM	FEM Input supply Voltage	-0.5	5	V

Extreme caution must be exercised to prevent electrostatic discharge (ESD) damage.

Symbol	Condition	ESD Rating	Unit
ESD_HAND_HBM	Human body model contact discharge per JEDEC EID/JESD22-A114	2	kV
ESD_HAND_CDM	Charged device model contact discharge per JEDEC EIA/JESD22-C101	250	V

Note: All pins except O_PAD_BT_13DBMOP, which passed at 250V.

2.2.2 Recommended Operating Rating

The module requires three power supplies: VBAT and VBATFEM and VDDIO.

Voltage rails	Min.	Typ.	Max.	Unit
VBAT	3.2	4.2	4.6	V
VBATFEM	3.2	4.2	4.6	V
VDDIO	1.68	1.8	1.98	V

VBAT current consumption 1200mA(Peak), when VBAT = 3.3V

The module requires two power supplies: other Digital I/O Pins.

For VDDIO=1.8V	Min.	Max.	Unit
VIH	0.65×VDDIO	N/A	V
VIL	N/A	0.4×VDDIO	V
VOH output@2mA	VDDIO-0.4	N/A	V
VOL output@2mA	N/A	0.4	V

3. Wi-Fi RF Specification

3.1 2.4GHz RF Specification

Conditions : VBAT=4.2V ; VBATFEM=4.2V ;VDDIO=1.8V ; Temp:25°C

Feature	Description
WLAN Standard	IEEE 802.11b/g/n & Wi-Fi compliant
Frequency Range	2.400 GHz ~ 2.4835 GHz (2.4GHz ISM Band)
Number of Channels	2.4GHz ： Ch1 ~ Ch13
Modulation	802.11b : DQPSK、DBPSK、CCK 802.11 g/n : OFDM /64-QAM、16-QAM、QPSK、BPSK 802.11ax : OFDM /256-QAM、64-QAM、16-QAM、QPSK、BPSK

Output Power , tolerance ± 2 dB

The transmit EVM quality & spectrum mask are compliant with IEEE 802.11 standard

802.11b	**1Mbps**	**2Mbps**	**5.5Mbps**	**11Mbps**	
	19	19	19	19	
802.11g	**6、9Mbps**	**12、18Mbps**	**24Mbps**	**36Mbps**	**48Mbps**
	18.5	18	18	18	18
	54Mbps				
	17.5				
802.11n 20MHz	**MCS0~2**	**MCS3**	**MCS4**	**MCS5**	**MCS6**
	18.5	18	18	18	17
	MCS7				
	17				
802.11ax 20MHz	**HE0~2**	**HE3**	**HE4**	**HE5**	**HE6**
	18.5	**18**	**18**	**18**	**17**
	HE7	**HE8**	**HE9**		
	17	**16**	**15**		

Note: The specifications of RF output power are subject to change to fulfill the safety regulation and requirements in end-user product.

Sensitivity, tolerance ± 2 dB

CCK modulation PER ≦ 8%、OFDM modulation PER ≦ 10%

802.11b	**Data Rate**	**Spec.(dBm)**		
	1Mbps	-97		
	2Mbps	-95		
	5.5Mbps	-93		
	11Mbps	-90		

802.11g SISO	Data Rate	Spec.(dBm)	Data Rate	Spec.(dBm)
	6Mbps	-94	24Mbps	-86
	9Mbps	-92	36Mbps	-83
	12Mbps	-91	48Mbps	-78
	18Mbps	-89	54Mbps	-77
802.11g MIMO	Data Rate	Spec.(dBm)	Data Rate	Spec.(dBm)
	6Mbps	-96	24Mbps	-88
	9Mbps	-94	36Mbps	-85
	12Mbps	-93	48Mbps	-80
	18Mbps	-91	54Mbps	-79
802.11n_20MHz SISO	Data Rate	Spec.(dBm)	Data Rate	Spec.(dBm)
	MCS0	-93	MCS4	-82.5
	MCS1	-90	MCS5	-80
	MCS2	-88	MCS6	-77
	MCS3	-85	MCS7	-76
802.11n_20MHz MIMO	Data Rate	Spec.(dBm)	Data Rate	Spec.(dBm)
	MCS0	-95	MCS5	-82
	MCS1	-92	MCS6	-79
	MCS2	-90	MCS7	-78
	MCS3	-87	MCS8	-94
	MCS4	-84.5	MCS15	-75
802.11ax_20MHz SISO	Data Rate	Spec.(dBm)	Data Rate	Spec.(dBm)
	HE0	-94	HE6	-77
	HE1	-90	HE7	-77
	HE2	-88	HE8	-73
	HE3	-85	HE9	-71
	HE4	-82.5		
	HE5	-80		
Maximum Input Level	802.11b : -10 dBm			
	802.11g/n/ax : -20 dBm			

3.2 5GHz RF Specification

Conditions : VBAT=4.2V ;VBATFEM =4.2V ; VDDIO=1.8V ; Temp:25°C

Feature	Description
WLAN Standard	IEEE 802.11a/n/ac/ax & Wi-Fi compliant
Frequency Range	5.15~5.35GHz、5.47~5.725GHz、5.725~5.85GHz (5GHz UNII Band)
Number of Channels	5.15~5.35GHz：Ch36 ~ Ch64 5.47~5.725GHz：Ch100 ~ Ch140 5.725~5.85GHz：Ch149 ~ Ch165
Modulation	802.11a : OFDM /64-QAM、16-QAM、QPSK、BPSK 802.11n : OFDM /64-QAM、16-QAM、QPSK、BPSK 802.11ac : OFDM /256-QAM、OFDM /64-QAM、16-QAM、QPSK、BPSK 802.11ax : OFDM/ 1024-QAM、 OFDM /256-QAM、OFDM /64-QAM、16-QAM、QPSK、BPSK

Output Power , tolerance ± 2 dB

The transmit EVM quality & spectrum mask are compliant with IEEE 802.11 standard

802.11a	**Frequency (MHz)**	**6~9Mbps**	**12~18Mbps**	**24Mbps**	**36Mbps**
	5150~5350	18.5	18.5	18.5	18.5
	5470~5720	18.5	18.5	18.5	18.5
	5725~5845	18.5	18.5	18.5	18.5
	Frequency (MHz)	**48Mbps**	**54Mbps**		
	5150~5350	18.5	17.5		
	5470~5720	18.5	17.5		
	5725~5845	18.5	17.5		
802.11n 20MHz	**Frequency (MHz)**	**MCS0~2**	**MCS3**	**MCS4**	**MCS5**
	5150~5350	18.5	18.5	18.5	18.5
	5470~5720	18.5	18.5	18.5	18.5
	5725~5845	18.5	18.5	18.5	18.5
	Frequency (MHz)	**MCS6**	**MCS7**		
	5150~5350	17.5	16		
	5470~5720	17.5	16		
	5725~5845	17.5	16		

802.11n 40MHz	Frequency (MHz)	MCS0~2	MCS3	MCS4	MCS5
	5150~5350	18.5	18.5	18	18
	5470~5720	18.5	18.5	18	18
	5725~5845	18.5	18.5	18	18
	Frequency (MHz)	MCS6	MCS7		
	5150~5350	17	16		
	5470~5720	17	16		
	5725~5845	17	16		
802.11ac 20MHz	Frequency (MHz)	MCS0~2	MCS3	MCS4	MCS5
	5150~5350	18.5	18.5	18.5	18.5
	5470~5720	18.5	18.5	18.5	18.5
	5725~5845	18.5	18.5	18.5	18.5
	Frequency (MHz)	MCS6	MCS7	MCS8	
	5150~5350	17.5	16	15	
	5470~5720	17.5	16	15	
	5725~5845	17.5	16	15	
802.11ac 40MHz	Frequency (MHz)	MCS0~2	MCS3	MCS4	MCS5
	5150~5350	18.5	18.5	18.5	18.5
	5470~5720	18.5	18.5	18.5	18.5
	5725~5845	18.5	18.5	18.5	18.5
	Frequency (MHz)	MCS6	MCS7	MCS8	MCS9
	5150~5350	17.5	16	15	14
	5470~5720	17.5	16	15	14
	5725~5845	17.5	16	15	14
802.11ac 80MHz	Frequency (MHz)	MCS0~2	MCS3	MCS4	MCS5
	5150~5350	18	18	17.5	17.5
	5470~5720	18	18	17.5	17.5
	5725~5845	18	18	17.5	17.5
	Frequency (MHz)	MCS6	MCS7	MCS8	MCS9
	5150~5350	16.5	15.5	15	14
	5470~5720	16.5	15.5	15	14
	5725~5845	16.5	15.5	15	14

802.11ax 20MHz	Frequency (MHz)	HE0~2	HE3	HE4	HE5
	5150~5350	18.5	18.5	18.5	18.5
	5470~5720	18.5	18.5	18.5	18.5
	5725~5845	18.5	18.5	18.5	18.5
	Frequency (MHz)	HE6	HE7	HE8	HE9
	5150~5350	17.5	16	15	14
	5470~5720	17.5	16	15	14
	5725~5845	17.5	16	15	14
	Frequency (MHz)	HE10	HE11		
	5150~5350	13	13		
	5470~5720	13	13		
	5725~5845	13	13		
802.11ax 40MHz	Frequency (MHz)	HE0~2	HE3	HE4	HE5
	5150~5350	18.5	18.5	18.5	18.5
	5470~5720	18.5	18.5	18.5	18.5
	5725~5845	18.5	18.5	18.5	18.5
	Frequency (MHz)	HE6	HE7	HE8	HE9
	5150~5350	17.5	16	15	14
	5470~5720	17.5	16	15	14
	5725~5845	17.5	16	15	14
	Frequency (MHz)	HE10	HE11		
	5150~5350	13	13		
	5470~5720	13	13		
	5725~5845	13	13		
802.11ax 80MHz	Frequency (MHz)	HE0~2	HE3	HE4	HE5
	5150~5350	18	18	17.5	17.5
	5470~5720	18	18	17.5	17.5
	5725~5845	18	18	17.5	17.5
	Frequency (MHz)	HE6	HE7	HE8	HE9
	5150~5350	16.5	15.5	15	14
	5470~5720	16.5	15.5	15	14
	5725~5845	16.5	15.5	15	14
	Frequency (MHz)	HE10	HE11		
	5150~5350	13	13		
	5470~5720	13	13		
	5725~5845	13	13		
Note: The specifications of RF output power are subject to change to fulfill the safety regulation and requirements in end-user product.					

Sensitivity, tolerance ± 2 dB OFDM modulation PER ≦ 10%				
802.11a SISO	Data Rate	Spec.(dBm)	Data Rate	Spec.(dBm)
	6Mbps	-94	24Mbps	-85
	9Mbps	-92	36Mbps	-82
	12Mbps	-91	48Mbps	-78
	18Mbps	-88	54Mbps	-76
802.11n_20MHz SISO	Data Rate	Spec.(dBm)	Data Rate	Spec.(dBm)
	MCS0	-93	MCS4	-82
	MCS1	-91	MCS5	-77
	MCS2	-89	MCS6	-76
	MCS3	-85	MCS7	-74
802.11n_20MHz MIMO	Data Rate	Spec.(dBm)	Data Rate	Spec.(dBm)
	MCS0	-95	MCS5	-79
	MCS1	-93	MCS6	-78
	MCS2	-91	MCS7	-76
	MCS3	-87	MCS8	-93
	MCS4	-84	MCS15	-74
802.11n_40MHz SISO	Data Rate	Spec.(dBm)	Data Rate	Spec.(dBm)
	MCS0	-91	MCS4	-79
	MCS1	-88	MCS5	-75
	MCS2	-86	MCS6	-73
	MCS3	-82	MCS7	-71
802.11n_40MHz MIMO	Data Rate	Spec.(dBm)	Data Rate	Spec.(dBm)
	MCS0	-93	MCS5	-77
	MCS1	-90	MCS6	-75
	MCS2	-88	MCS7	-73
	MCS3	-84	MCS8	-91
	MCS4	-81	MCS15	-71

802.11ac_20MHz SISO	Data Rate	Spec.(dBm)	Data Rate	Spec.(dBm)
	MCS0	-93	MCS5	-77
	MCS1	-91	MCS6	-76
	MCS2	-89	MCS7	-74
	MCS3	-85	MCS8	-73
	MCS4	-82		
802.11ac_20MHz MIMO	Data Rate	Spec.(dBm)	Data Rate	Spec.(dBm)
	MCS0,NSS=1	-95	MCS6,NSS=1	-78
	MCS1,NSS=1	-93	MCS7,NSS=1	-76
	MCS2,NSS=1	-92	MCS8,NSS=1	-75
	MCS3,NSS=1	-87	MCS0,NSS=2	-93
	MCS4,NSS=1	-84	MCS8,NSS=2	-70
	MCS5,NSS=1	-79		
802.11ac_40MHz SISO	Data Rate	Spec.(dBm)	Data Rate	Spec.(dBm)
	MCS0	-91	MCS5	-75
	MCS1	-88	MCS6	-73
	MCS2	-86	MCS7	-71
	MCS3	-82	MCS8	-70
	MCS4	-79	MCS9	-67.5
802.11ac_40MHz MIMO	Data Rate	Spec.(dBm)	Data Rate	Spec.(dBm)
	MCS0,NSS=1	-93	MCS6,NSS=1	-75
	MCS1,NSS=1	-90	MCS7,NSS=1	-73
	MCS2,NSS=1	-88	MCS8,NSS=1	-72
	MCS3,NSS=1	-84	MCS9,NSS=1	-69.5
	MCS4,NSS=1	-81	MCS0,NSS=2	-91
	MCS5,NSS=1	-77	MCS9,NSS=2	-66.5
802.11ac_80MHz SISO	Data Rate	Spec.(dBm)	Data Rate	Spec.(dBm)
	MCS0	-88	MCS5	-72
	MCS1	-85	MCS6	-70
	MCS2	-83	MCS7	-68
	MCS3	-79	MCS8	-67
	MCS4	-76	MCS9	-65

802.11ac_80MHz MIMO	Data Rate	Spec.(dBm)	Data Rate	Spec.(dBm)
	MCS0,NSS=1	-90	MCS6,NSS=1	-72
	MCS1,NSS=1	-87	MCS7,NSS=1	-70
	MCS2,NSS=1	-85	MCS8,NSS=1	-69
	MCS3,NSS=1	-81	MCS9,NSS=1	-67
	MCS4,NSS=1	-78	MCS0,NSS=2	-88
	MCS5,NSS=1	-74	MCS9,NSS=2	-64
802.11ax_20MHz SISO	Data Rate	Spec.(dBm)	Data Rate	Spec.(dBm)
	HE0	-93	HE6	-76
	HE1	-91	HE7	-73
	HE2	-89	HE8	-71
	HE3	-86	HE9	-67
	HE4	-82	HE10	-62
	HE5	-78	HE11	-60
802.11ax_40MHz SISO	Data Rate	Spec.(dBm)	Data Rate	Spec.(dBm)
	HE0	-88	HE6	-70
	HE1	-86	HE7	-69
	HE2	-83	HE8	-65
	HE3	-80	HE9	-64
	HE4	-76	HE10	-60
	HE5	-72	HE11	-55
802.11ax_80MHz SISO	Data Rate	Spec.(dBm)	Data Rate	Spec.(dBm)
	HE0	-88	HE6	-70
	HE1	-85	HE7	-68
	HE2	-82	HE8	-65
	HE3	-79	HE9	-64
	HE4	-76	HE10	-58
	HE5	-71	HE11	-54
Maximum Input Level	802.11a/n/ac/ax : -30 dBm			

4. Bluetooth Specification

4.1 Bluetooth Specification

Conditions : VBAT=4.2V ; VDDIO=1.8V ; Temp:25°C

Feature	**Description**
General Specification	
Bluetooth Standard	BDR、EDR(2、3Mbps)、LE(1Mbps)、LE2(2Mbps)
Host Interface	UART
Frequency Band	2402 MHz ~ 2480 MHz
Number of Channels	79 channels for classic、40 channels for BLE
Modulation	GFSK, π/4-DQPSK, 8DPSK
RF Specification	
Normal Output Power , tolerance ± 2.5 dB	
	CL1 (dBm)
BDR Output Power	8
EDR Output Power	6
BLE Output Power	7
High Output Power , tolerance ± 3 dB	
	CL1 (dBm)
BDR Output Power	15
EDR Output Power	11.5
BLE Output Power	15
Sensitivity, tolerance ± 2 dB	
Sensitivity @ BER=0.1% for GFSK (1Mbps)	-89 dBm
Sensitivity @ BER=0.01% for π/4-DQPSK (2Mbps)	-92 dBm
Sensitivity @ BER=0.01% for 8DPSK (3Mbps)	-84 dBm
Sensitivity @ PER=30.8%	-92 dBm

for LE (1Mbps)	
Sensitivity @ PER=30.8% for 2LE (2Mbps)	-91 dBm
Maximum Input Level	GFSK (1Mbps):-20dBm
	π/4-DQPSK (2Mbps) :-20dBm
	8DPSK (3Mbps) :-20dBm

Note*：The Bluetooth BDR output power is able to be configured by firmware (hcd file).

5. Pin Definition

5.1 Pin Outline

PIN OUTLINE
<TOP VIEW>

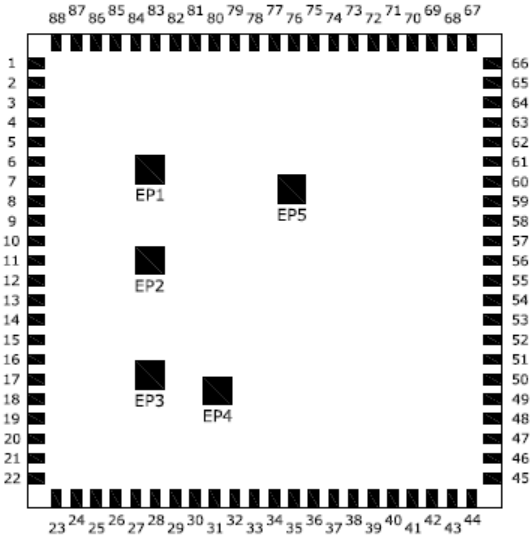

5.2 Pin Assignment

NO	Name	Type	Description
1	GND	—	Ground connections
2	GND	—	Ground connections
3	WL_ANT0	I/O	RF I/O port0
4	GND	—	Ground connections
5	GND	—	Ground connections
6	GND	—	Ground connections
7	GND	—	Ground connections
8	GND	—	Ground connections
9	GND	—	Ground connections
10	GND	—	Ground connections
11	GND	—	Ground connections
12	GND	—	Ground connections
13	GND	—	Ground connections
14	GND	—	Ground connections
15	GND	—	Ground connections
16	GND	—	Ground connections
17	GND	—	Ground connections

18	GND	—	Ground connections
19	GND	—	Ground connections
20	WL_ANT1	I/O	RF I/O port1
21	GND	—	Ground connections
22	GND	—	Ground connections
23	GND	—	Ground connections
24	VBATFEM	P	FEM power voltage source input
25	VBATFEM	P	FEM power voltage source input
26	WL_GPIO_2	I/O	WL_GPIO_2
27	WL_REG_ON	I	Low asserting reset for WiFi core
28	WL_DVE_WAKE	O	HOST to wake-up WLAN and WL_GPIO_1
29	WL_HOST_WAKE	O	WLAN to wake-up HOST and WL_GPIO_0
30	GND	—	Ground connections
31	WL_GPIO_7	I/O	WL_GPIO_7
32	WL_GPIO_6	I/O	WL_GPIO_6
33	WL_GPIO_3	I/O	WL_GPIO_3
34	NC	—	Floating (Don’t connected to ground)
35	NC	—	Floating (Don’t connected to ground)
36	WL_UART_CTS_N	I	WIFI Debug UART interface
37	WL_UART_RTS_N	O	WIFI Debug UART interface
38	WL_UART_RXD	I	WIFI Debug UART interface
39	WL_UART_TXD	O	WIFI Debug UART interface
40	CLK_REQ	I/O	Reference clock request(shared BT and WIFI) if not used, this can be no-connect
41	PCIE_PREST_L	I	PCIe host indication to reset the device
42	PCIE_PME_L	OD	PCIe power management event output
43	PCIE_CLKREQ_L	OD	PCIe clock request
44	GND	—	Ground connections
45	ABUCK_1P12	I	Internal Analog Buck voltage generation pin
46	ASR_VLX	O	Internal Analog Buck voltage generation pin
47	GND	—	Ground connections
48	CSR_VLX	O	Internal Buck voltage generation pin
49	GND	—	Ground connections
50	CBUCK_0P9	I	Internal Buck voltage generation pin
51	GND	—	Ground connections
52	LPO_IN	I	External Low Power Clock input (32.768KHz)
53	GND	—	Ground connections
54	VDDIO	P	I/O Voltage supply input
55	GND	—	Ground connections

56	VBAT	P	Main power voltage source input
57	VBAT	P	Main power voltage source input
58	GND	—	Ground connections
59	PCIE_RCLK_N	I	PCI Express differential clock input-Negative
60	PCIE_RCLK_P	I	PCI Express differential clock input-Positive
61	GND	—	Ground connections
62	PCIE_RDP	I	PCI Express receive data-Positive
63	PCIE_RDN	I	PCI Express receive data-Negative
64	GND	—	Ground connections
65	PCIE_TDP	O	PCI Express transmit data-Positive
66	PCIE_TDN	O	PCI Express transmit data-Negative
67	GND	—	Ground connections
68	BT_UART_TXD	O	Bluetooth UART serial data output
69	BT_UART_RXD	I	Bluetooth UART serial data input
70	BT_UART_RTS	O	Bluetooth UART request to send
71	BT_UART_CTS	I	Bluetooth UART clear to send
72	BT_DEV_WAKE	I	HOST wake-up Bluetooth device
73	BT_HOST_WAKE	O	Bluetooth device to wake-up HOST
74	BT_REG_ON	I	Low asserting reset for Bluetooth core
75	GND	—	Ground connections
76	XTAL_IN	I	External Crystal in/ Single clock source in
77	XTAL_OUT	O	External Crystal out
78	GND	—	Ground connections
79	BT_PCM_CLK	I	PCM clock
80	BT_PCM_SYNC	I/O	PCM sync signal
81	BT_PCM_IN	I	PCM data input
82	BT_PCM_OUT	O	PCM Data output
83	BT_GPIO2	I/O	BT_GPIO2
84	BT_GPIO3	I/O	BT_GPIO3
85	BT_GPIO4	I/O	BT_GPIO4
86	GND	—	Ground connections
87	BT_ANT 2	I/O	BT RF port 2
88	GND	—	Ground connections
EP1	EP1	—	Ground connections
EP2	EP2	—	Ground connections
EP3	EP3	—	Ground connections
EP4	EP4	—	Ground connections
EP5	EP5	—	Ground connections

6. Dimensions

6.1 Module Dimensions

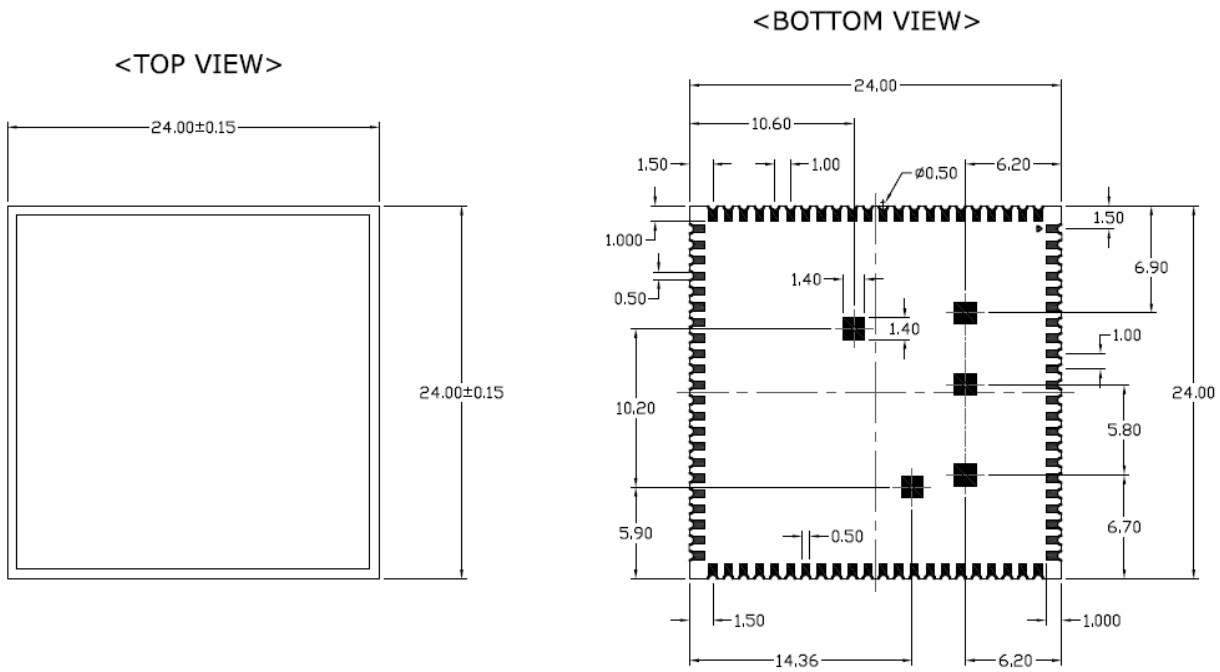

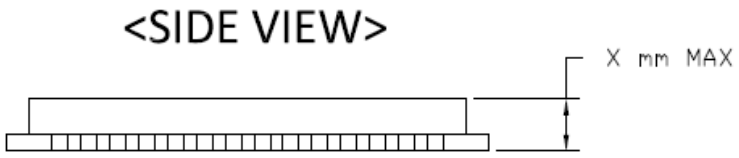

Note, X = 2.1mm

6.2 Recommended footprint

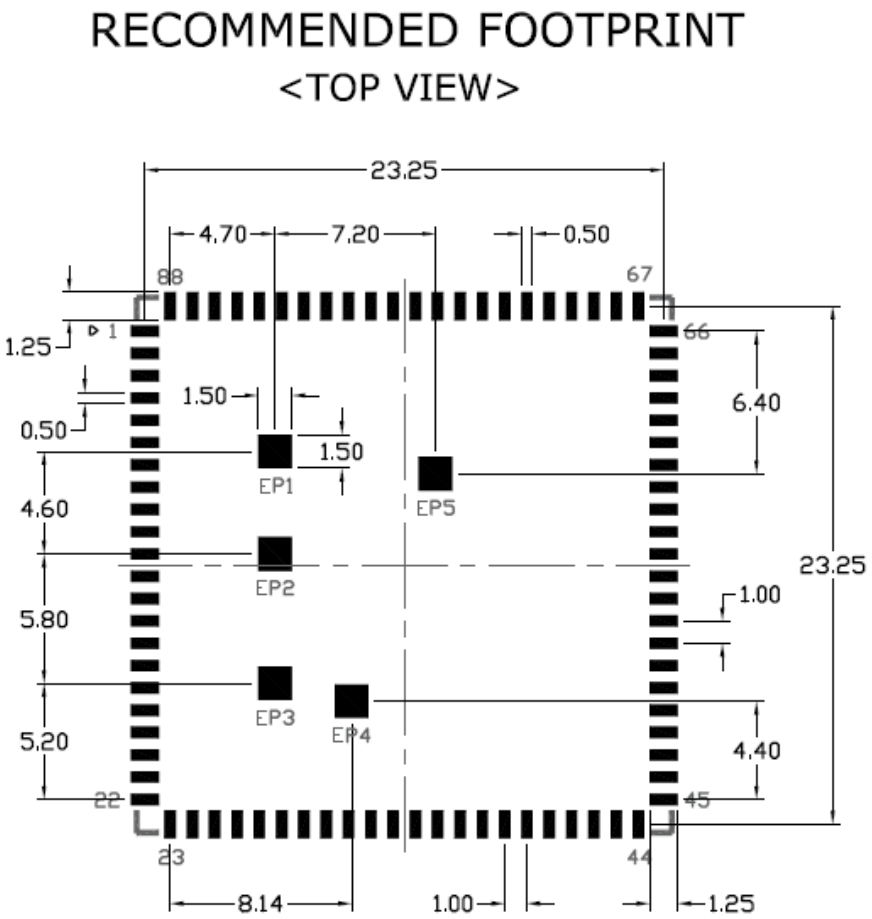

- Solder paste layer design is generally the same as recommended footprint.
  (錫膏層設計通常建議和焊墊尺寸相同)
- If soldering quality with good wetting on upright side is essential for PQC, how to optimize the aperture design in the stencil to adjust the amount of solder paste would be crucial.
  In addition, a kind of stencil design with stepped thickness in partial area would be considered if the thickness of stencil is about 0.1mm or thinner. Please optimize the stencil design by manufacture engineer or contact AMPAK FAE for assistance.
  (如果模組吃錫品質考量側面爬錫，如何優化鋼網開孔設計以調整適當的錫膏量是非常重要的。尤其鋼網的厚度大約是 0.1mm 或更薄時，可考慮局部加厚鋼網的設計。請諮詢製程工程師以優化鋼網的設計,或是聯絡正基科技技術支持團隊).

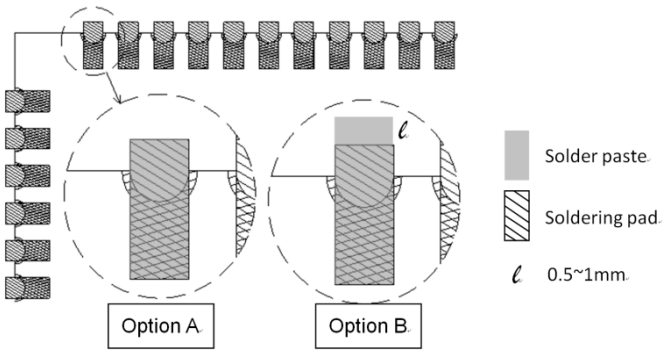

7. External clock reference

External LPO signal characteristics

Parameter	Specification	Units
Nominal input frequency	32.768	kHz
Frequency accuracy	+/-25	ppm
Duty cycle	30 - 70	%
Input signal amplitude	1.8±0.09	V
Signal type	Square-wave or sine-wave	-
Input impedance	>100k <5	Ω pF
Clock jitter (integrated over 300Hz – 15KHz)	<1	Hz
Output high voltage	0.7Vio - Vio	V

External 37.4MHz X'TAL characteristics

Parameter	Specification	Units
Nominal frequency - F0	37.4	MHz
Frequency Tolerance - △F / F 0 (At 25℃ +/- 3℃)	+/- 10	ppm
Operation Temperature Range - Topr	-30 ~ + 85	℃
Freq. Stability(over operating temperature) - TC Ref. to 25℃	+/- 10	ppm
Load capacitance - CL	18	pF
Equivalent Series Resistance – ESR	Max. 60	Ω
Drive Level - DL	Typ. 50, Max. 100	uW
Insulation resistance – IR At 100Vdc	Min. 500	MΩ

8. Host Interface Timing Diagram

8.1 Reset and Startup Control Signal Sequencing

The BCM4375 has two signals that allow the host to control power consumption by enabling or disabling the Bluetooth, WLAN, and internal regulator blocks. These signals are described below. Additionally, diagrams are provided to indicate proper sequencing of the signals for various operational states. The timing values indicated are minimum required values; longer delays are also acceptable.

- WL_REG_ON: This signal is used by the PMU to power up the WLAN section. It is also OR-gated with the BT_REG_ON input to control the internal regulators. When this pin is high, the regulators are enabled and the WLAN section is out of reset. When this pin is low, the WLAN section is in reset. If BT_REG_ON and WL_REG_ON are both low, the regulators are disabled. This pin has an internal 50kΩ pull-down resistor.
- BT_REG_ON: This signal is used by the PMU to decide whether or not to power down the internal regulators. If BT_REG_ON and WL_REG_ON are low, the regulators will be disabled. This pin has an internal 50 kΩ pull-down resistor.

NOTE: The VBAT and VDDIO 10% – 90% rise time slopes must be greater than 50 μs/V.

NOTE:. The module main chip has an internal power-on reset (POR) circuit. The device will be held in reset for a maximum of 110 ms after VDDC and VDDIO have both passed the POR threshold. Wait at least 150 ms after VDDC and VDDIO are available before initiating PCIe accesses.

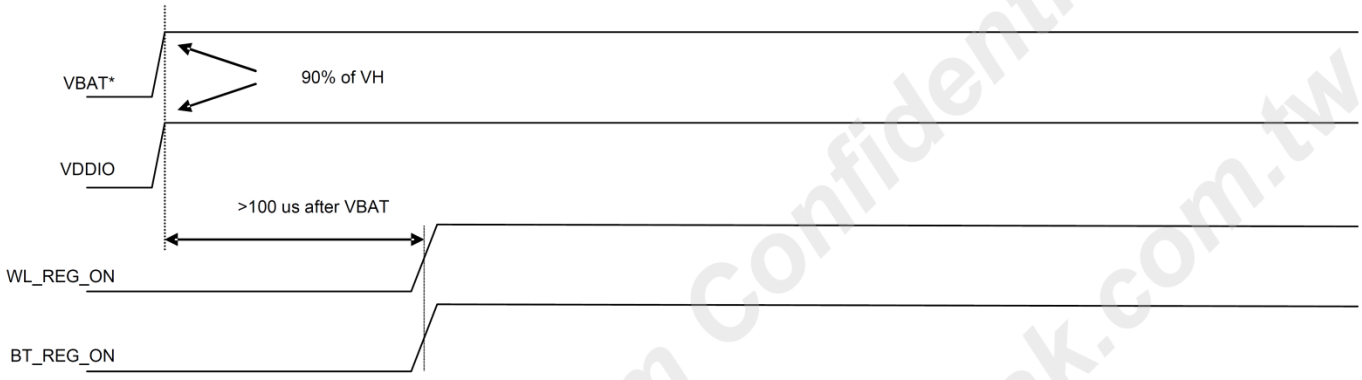

*Notes:
1. The VBAT and VDDIO 10%–90% rise-time slopes must be greater than 50 microseconds/V.
2. VBAT should be up before or at the same time as VDDIO. VDDIO should NOT be present first or be held high before VBAT is high.

WLAN=ON, Bluetooth=ON

Ampak Confidential
www.ampak.com.tw

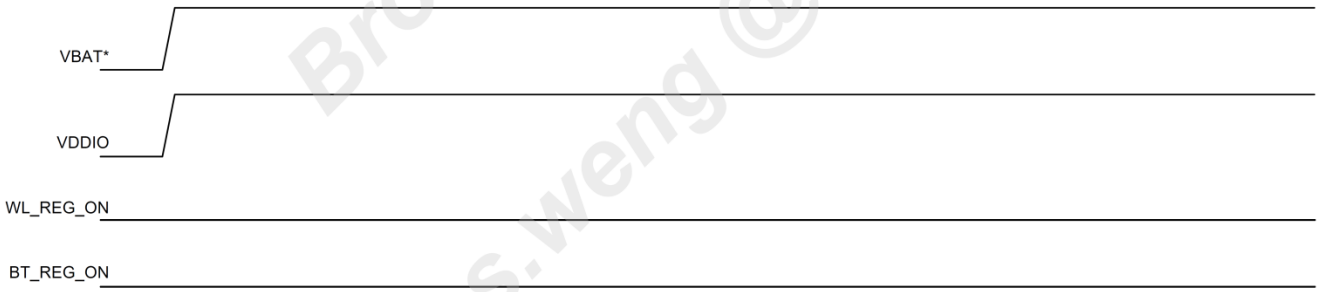

*Notes:
1. The VBAT and VDDIO 10%–90% rise-time slopes must be greater than 50 microseconds/V.
2. VBAT should be up before or at the same time as VDDIO. VDDIO should NOT be present first or be held high before VBAT is high.

WLAN=OFF, Bluetooth=OFF

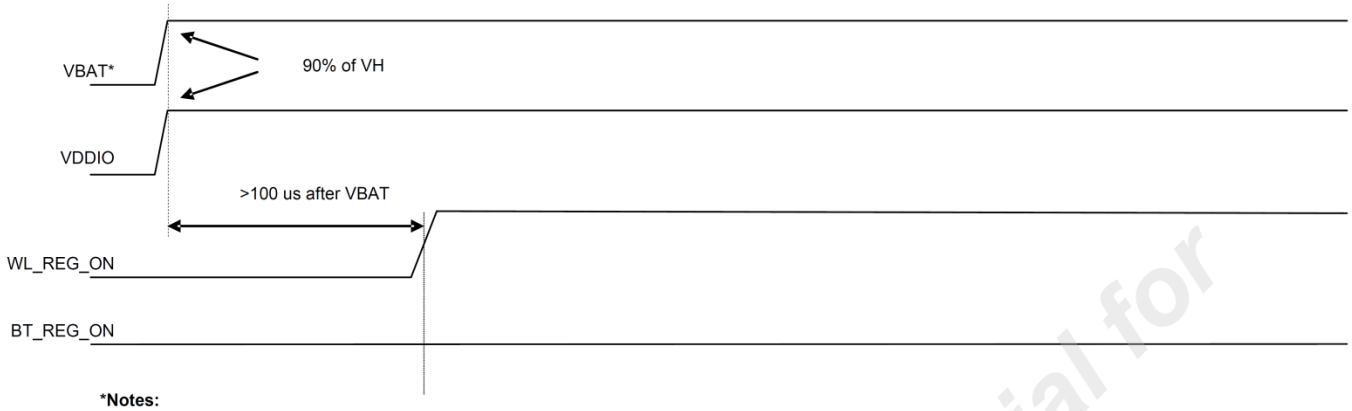

*Notes:
1. The VBAT and VDDIO 10%–90% rise-time slopes must be greater than 50 microseconds/V.
2. VBAT should be up before or at the same time as VDDIO. VDDIO should NOT be present first or be held high before VBAT is high.

WLAN=ON, Bluetooth=OFF

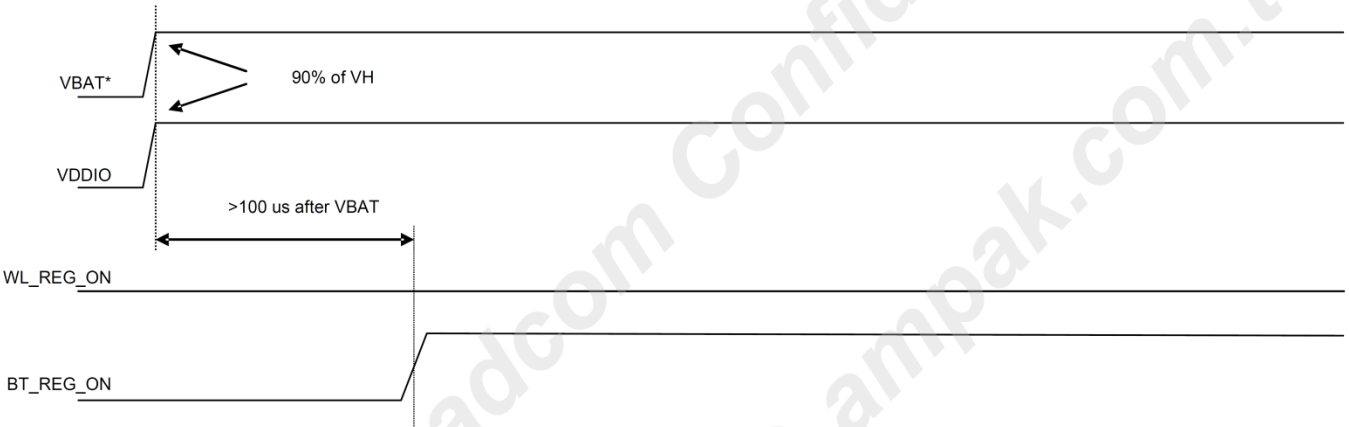

*Notes:
1. The VBAT and VDDIO 10%–90% rise-time slopes must be greater than 50 microseconds/V.
2. VBAT should be up before or at the same time as VDDIO. VDDIO should NOT be present first or be held high before VBAT is high.

WLAN=OFF, Bluetooth=ON

8.2 PCIe Interface Description

The PCI Express(PCIe) core on the AP6275HH3 is a high-performance serial I/O interconnect that is protocol compliant and electrically compatible with the PCI Express Base Specification v3.0 running at Gen2 speeds.

PCI Express Interface Parameters

Parameter	Symbol	Comments	Min.	Typ.	Max.	Unit
General[a]						
Baud rate	BPS	—	—	5	—	Gbaud
Reference clock peak-to-peak differential[b]	Vref	LVPECL, AC coupled	0.95	—	—	V
Receiver						
Differential termination	ZRX-DIFF-DC	Differential termination	80	100	120	Ω
DC impedance	ZRX-DC	DC common-mode impedance	40	50	60	Ω
Powered down termination (POS)	ZRX-HIGH-IMP-DC-POS	Power-down or RESET high impedance	100k	—	—	Ω
Powered down termination (NEG)	ZRX-HIGH-IMP-DC-NEG	Power-down or RESET high impedance	1k	—	—	Ω
Input voltage	VRX-DIFFp-p	AC coupled, differential p-p	175	—	—	mV
Jitter tolerance	TRX-EYE	Minimum receiver eye width	0.4	—	—	UI
Differential return loss	RLRX-DIFF	Differential return loss	10	—	—	dB
Common-mode return loss	RLRX-CM	Common-mode return loss	6	—	—	dB
Unexpected electrical idle enter detect threshold integration time	TRX-IDEL-DET-DIFF-ENTERTIME	An unexpected electrical idle must be recognized no longer than this time to signal an unexpected idle condition.	—	—	10	ms
Signal detect threshold	VRX-IDLE-DET-DIFFp-p	Electrical idle detect threshold	65	—	175	mV
Transmitter						
Output voltage	VTX-DIFFp-p	Differential p-p, programmable in 16 steps	0.8	—	1200	mV
Output voltage rise time	VTX-RISE	20% to 80%	0.125 (2.5 GT/s) 0.15 (5 GT/s)	—	—	UI
Output voltage fall time	VTX-FALL	80% to 20%	0.125 (2.5 GT/s) 0.15 (5 GT/s)	—	—	UI
RX detection voltage swing	VTX-RCV-DETECT	The amount of voltage change allowed during receiver detection.	—	—	600	mV

Broadcom Confidential for richard.wu@ampak.com.tw

PCI Express Interface Parameters (Continued)

Parameter	Symbol	Comments	Min.	Typ.	Max.	Unit
TX AC peak common-mode voltage (5 GT/s)	VTX-CM-AC-PP	TX AC common mode voltage (5 GT/s)	—	—	100	mV
TX AC peak common-mode voltage (2.5 GT/s)	VTX-CM-AC-P	TX AC common mode voltage (2.5 GT/s)	—	—	20	mV
Absolute delta of DC common-mode voltage during L0 and electrical idle	VTX-CM-DC-ACTIVE-IDLE-DELTA	Absolute delta of DC common-mode voltage during L0 and electrical idle.	0	—	100	mV
Absolute delta of DC common-mode voltage between D+ and D-	VTX-CM-DC-LINE-DELTA	DC offset between D+ and D-	0	—	25	mV
Electrical idle differential peak output voltage	VTX-IDLE-DIFF-AC-p	Peak-to-peak voltage	0	—	20	mV
TX short circuit current	ITX-SHORT	Current limit when TX output is shorted to ground.	—	—	90	mA
DC differential TX termination	ZTX-DIFF-DC	Low impedance defined during signaling (parameter is captured for 5.0 GHz by RLTX-DIFF)	80	—	120	Ω
Differential return loss	RLTX-DIFF	Differential return loss	10 (min) for 0.05: 1.25 GHz	—	—	dB
Common-mode return loss	RLTX-CM	Common-mode return loss	6	—	—	dB
TX eye width	TTX-EYE	Minimum TX eye width	0.75	—	—	UI

Broadcom Confidential for ampak.com.tw

PCIe Power-On Timing

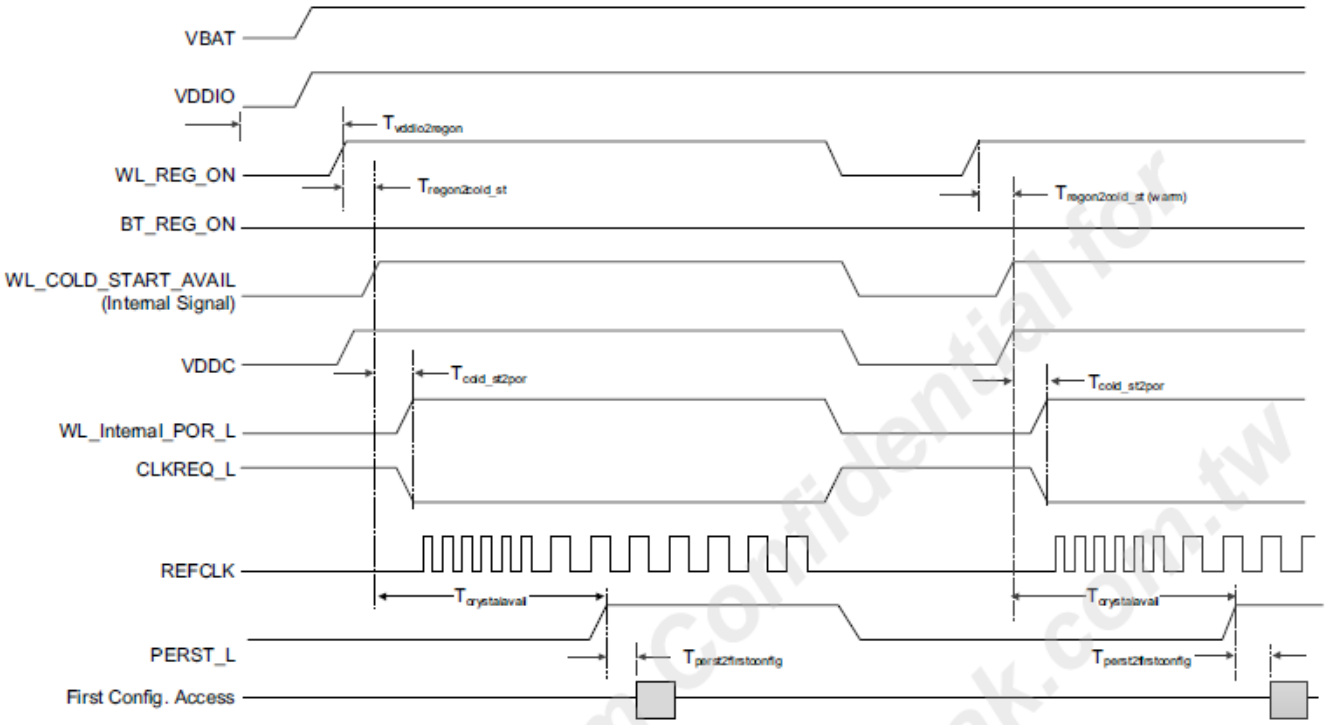

Timing Parameter	Notes	Value[a]	Unit
$T_{vddio2regon}$	–	0.1	ms
$T_{regon2cold\_st}$	3.4 ms + 162 instruction-level parallelism (ILP) cycles	10.13	ms
T_{cold_st2por}	54 ILP cycles	2.24	ms
$T_{crystalavail}$	509 ILP cycles	21.17	ms
$T_{perst2firstconfig}$	–	6.0	ms
$T_{vddioon2firstconfig}$	$T_{vddio2regon} + T_{regon2cold\_st} + T_{crystalavail} + T_{perst2firstconfig}$	37.4[b]	ms
$T_{regon2cold\_st\ (warm)}$	162 ILP cycles	6.73	ms

a. The time values assume an ILP tolerance of ±30%.

b. With VDDIO as a reference, 37.4 ms is the minimum system wait time before issuing the first configuration access.

8.3 PCM Interface Description

AP6275PR3 supports two independent PCM interfaces that share the pins with the I²S interfaces. The PCM interface can connect to linear PCM codec devices in master or slave mode. In master mode, generates the BT_PCM_CLK and BT_PCI_SYNC signals, and in slave mode, these signals are provided by another master on the PCM interface and are inputs to the AP6275PR3.

PCM Timing

Short Frame Sync, Master Mode

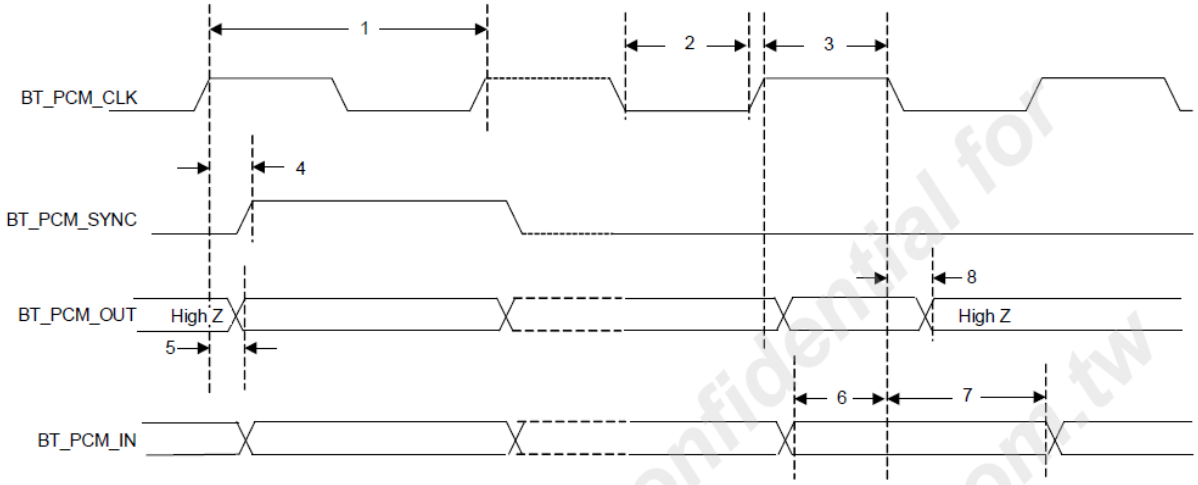

Reference	Characteristics	Minimum	Typical	Maximum	Unit
1	PCM bit clock frequency	—	—	12	MHz
2	PCM bit clock low	41	—	—	ns
3	PCM bit clock high	41	—	—	ns
4	BT_PCM_SYNC delay	0	—	25	ns
5	BT_PCM_OUT delay	0	—	25	ns
6	BT_PCM_IN setup	8	—	—	ns
7	BT_PCM_IN hold	8	—	—	ns
8	Delay from falling edge of BT_PCM_CLK during the last bit period to BT_PCM_OUT becoming high impedance.	0	—	25	ns

Broadcom Confidential for eng @ ampak.com.tw

Short Frame Sync, Slave Mode

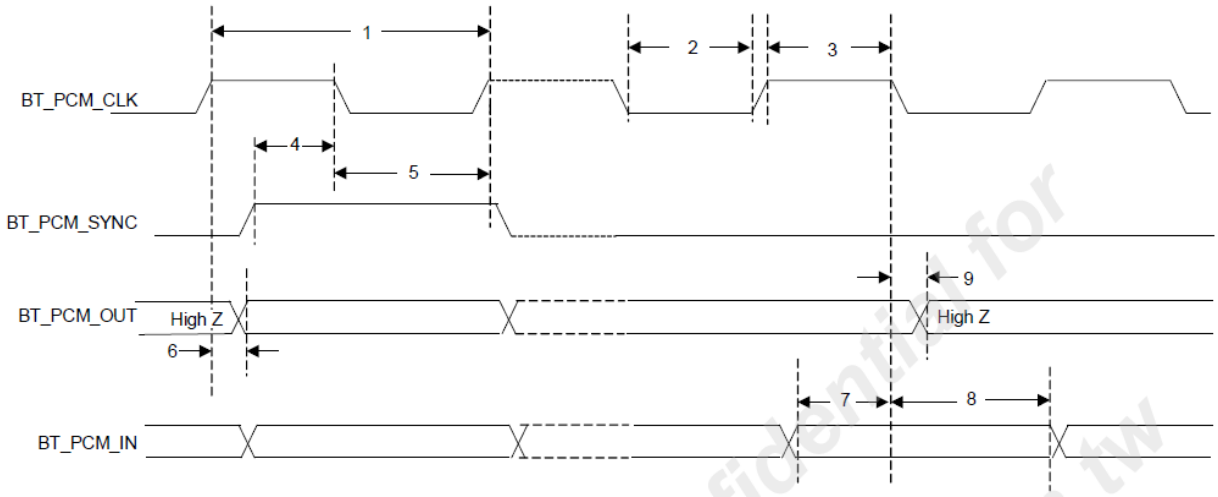

Reference	Characteristics	Minimum	Typical	Maximum	Unit
1	PCM bit clock frequency	—	—	12	MHz
2	PCM bit clock low	41	—	—	ns
3	PCM bit clock high	41	—	—	ns
4	BT_PCM_SYNC setup	8	—	—	ns
5	BT_PCM_SYNC hold	8	—	—	ns
6	BT_PCM_OUT delay	0	—	25	ns
7	BT_PCM_IN setup	8	—	—	ns
8	BT_PCM_IN hold	8	—	—	ns
9	Delay from falling edge of BT_PCM_CLK during the last bit period to BT_PCM_OUT becoming high impedance.	0	—	25	ns

Long Frame Sync, Master Mode

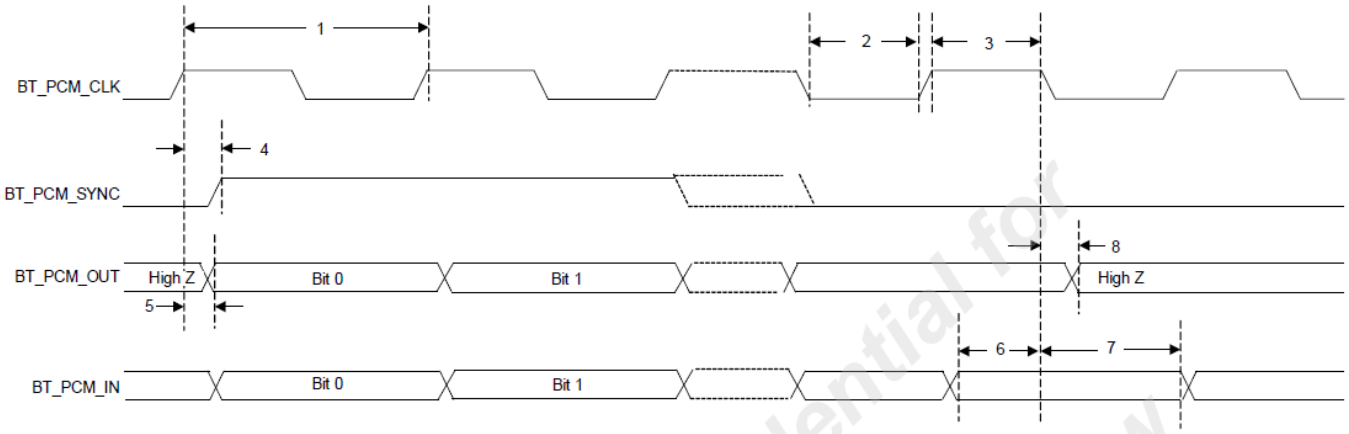

Reference	Characteristics	Minimum	Typical	Maximum	Unit
1	PCM bit clock frequency	—	—	12	MHz
2	PCM bit clock low	41	—	—	ns
3	PCM bit clock high	41	—	—	ns
4	BT_PCM_SYNC delay	0	—	25	ns
5	BT_PCM_OUT delay	0	—	25	ns
6	BT_PCM_IN setup	8	—	—	ns
7	BT_PCM_IN hold	8	—	—	ns
8	Delay from falling edge of BT_PCM_CLK during the last bit period to BT_PCM_OUT becoming high impedance.	0	—	25	ns

Long Frame Sync, Slave Mode

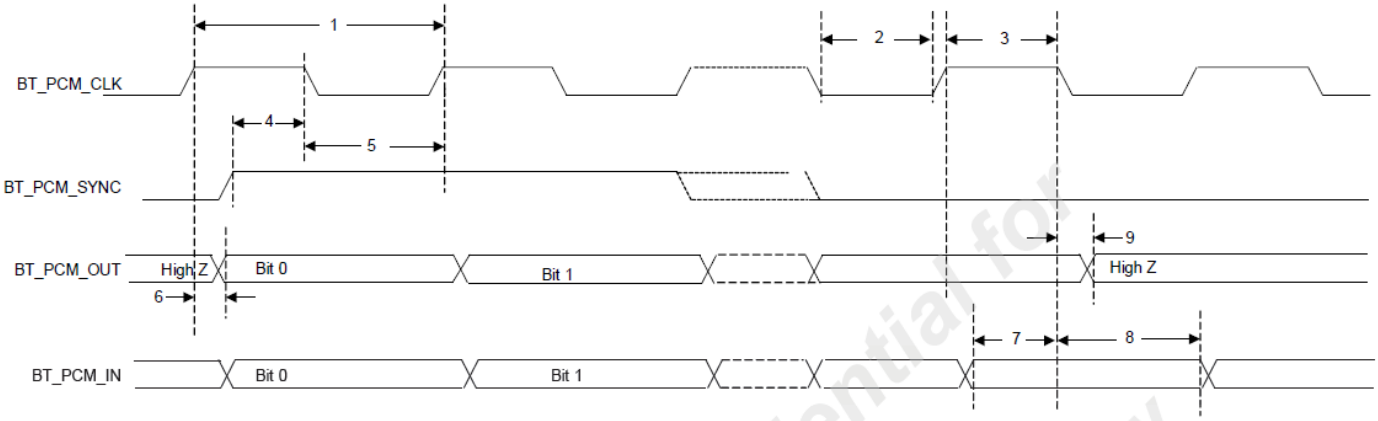

Reference	Characteristics	Minimum	Typical	Maximum	Unit
1	PCM bit clock frequency	—	—	12	MHz
2	PCM bit clock low	41	—	—	ns
3	PCM bit clock high	41	—	—	ns
4	BT_PCM_SYNC setup	8	—	—	ns
5	BT_PCM_SYNC hold	8	—	—	ns
6	BT_PCM_OUT delay	0	—	25	ns
7	BT_PCM_IN setup	8	—	—	ns
8	BT_PCM_IN hold	8	—	—	ns
9	Delay from falling edge of BT_PCM_CLK during the last bit period to BT_PCM_OUT becoming high impedance.	0	—	25	ns

Short Frame Sync, Burst Mode

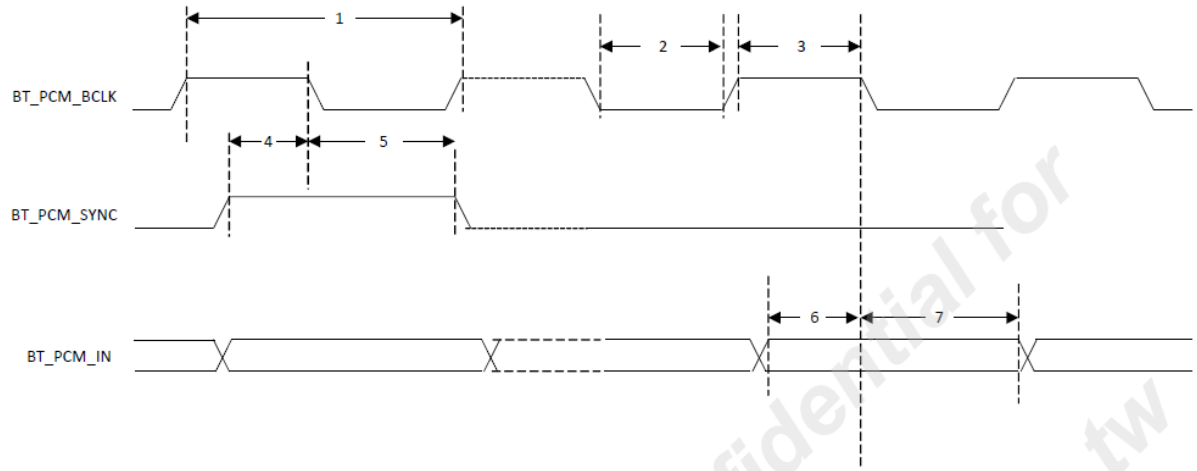

Reference	Characteristics	Minimum	Typical	Maximum	Unit
1	PCM bit clock frequency	—	—	24	MHz
2	PCM bit clock low	20.8	—	—	ns
3	PCM bit clock high	20.8	—	—	ns
4	BT_PCM_SYNC setup	8	—	—	ns
5	BT_PCM_SYNC hold	8	—	—	ns
6	BT_PCM_IN setup	8	—	—	ns
7	BT_PCM_IN hold	8	—	—	ns

Long Frame Sync, Burst Mode

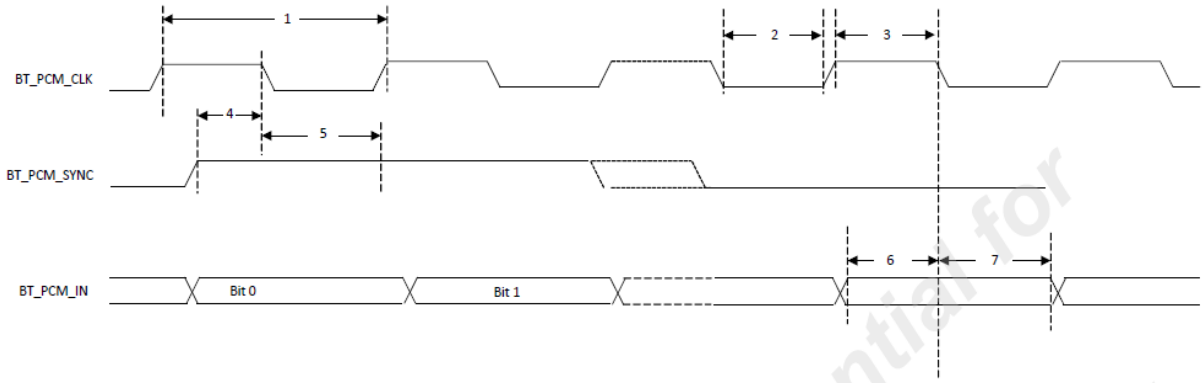

Reference	Characteristics	Minimum	Typical	Maximum	Unit
1	PCM bit clock frequency	—	—	24	MHz
2	PCM bit clock low	20.8	—	—	ns
3	PCM bit clock high	20.8	—	—	ns
4	BT_PCM_SYNC setup	8	—	—	ns
5	BT_PCM_SYNC hold	8	—	—	ns
6	BT_PCM_IN setup	8	—	—	ns
7	BT_PCM_IN hold	8	—	—	ns

8.4 UART Interface Description

The AP6275HH3 UART is a standard 4-wire interface with adjustable baud rates from 9600 bps to 4.0 Mbps. The interface features an automatic baud rate detection capability that returns a baud rate selection. Alternatively, the baud rate may be selected through a vendor-specific UART HCI command.

UART Timing

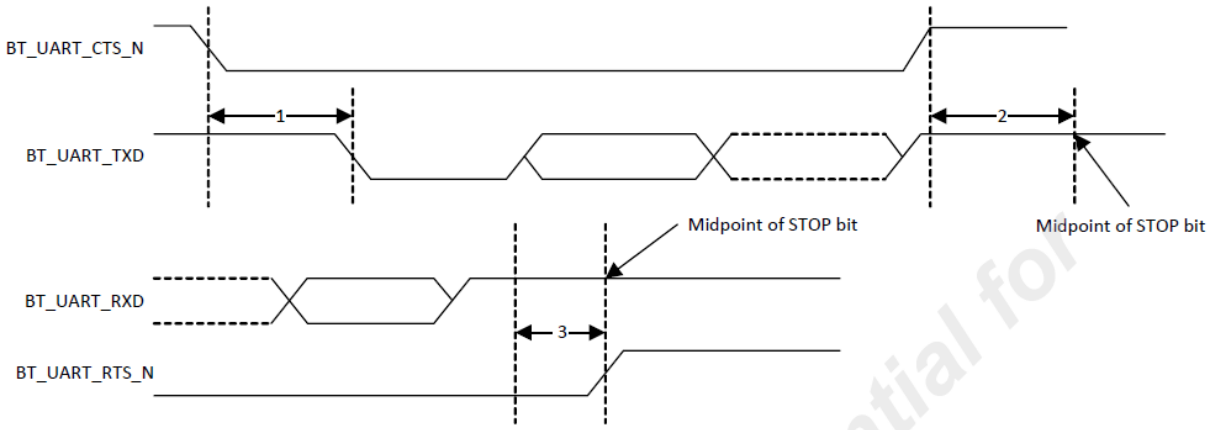

Reference	Characteristics	Minimum	Typical	Maximum	Unit
1	Delay time, BT_UART_CTS_N low to BT_UART_TXD valid	—	—	1.5	Bit periods
2	Setup time, BT_UART_CTS_N high before midpoint of stop bit	—	—	0.5	Bit periods
3	Delay time, midpoint of stop bit to BT_UART_RTS_N high	—	—	0.5	Bit periods

9. Recommended Reflow Profile

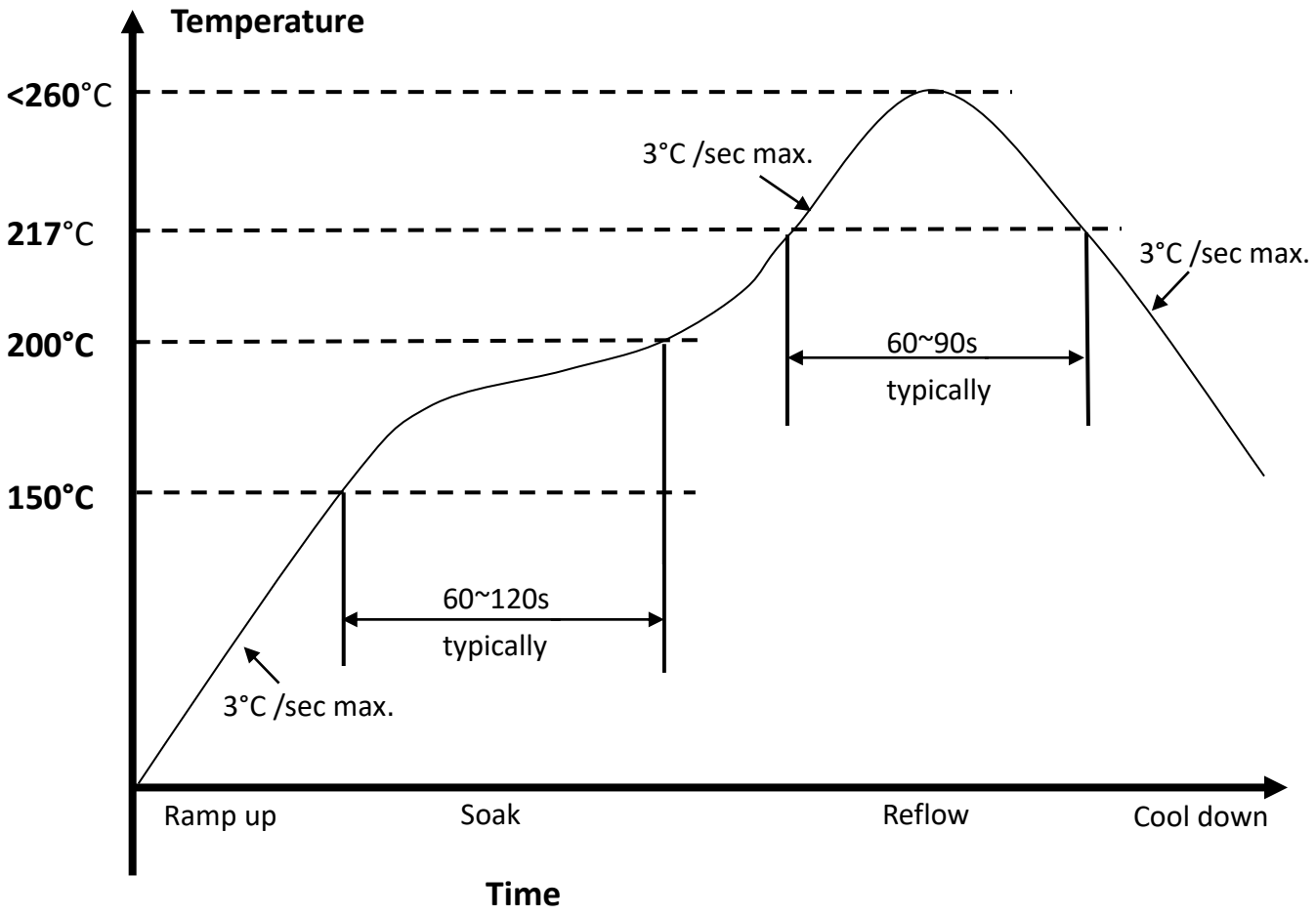

1. Referred to IPC/JEDEC standard
2. Peak Temperature : <260°C
3. Cycle of Reflow : 2 times max.
4. Adding Nitrogen (N2) to implement 2000ppm or less of oxygen concentration during reflow process is recommended.
5. If the shelf time is exceeded, be sure baking step to remove the moisture from the component

10. Package Information

10.1 Label

Label A→ Anti-static and humidity notice

Label B→ MSL caution / Storage Condition

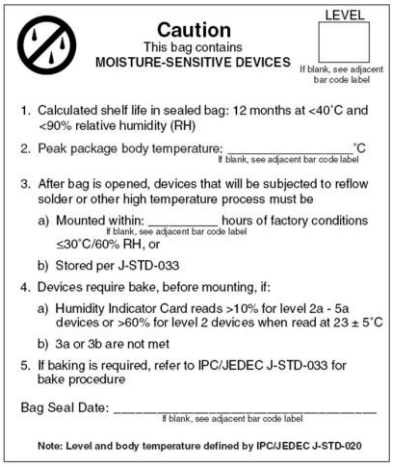

Label C→ Inner box label .

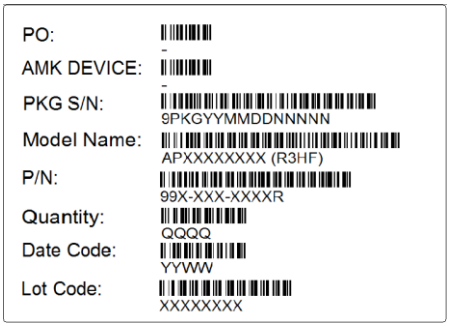

Label D→ Carton box label .

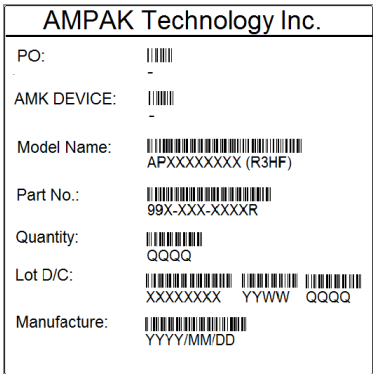

10.2 Tray Dimension

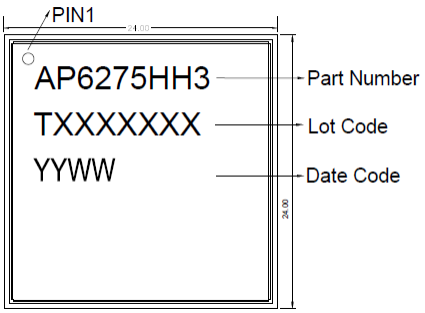

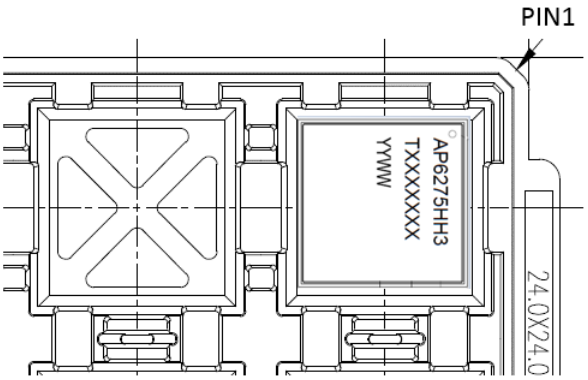

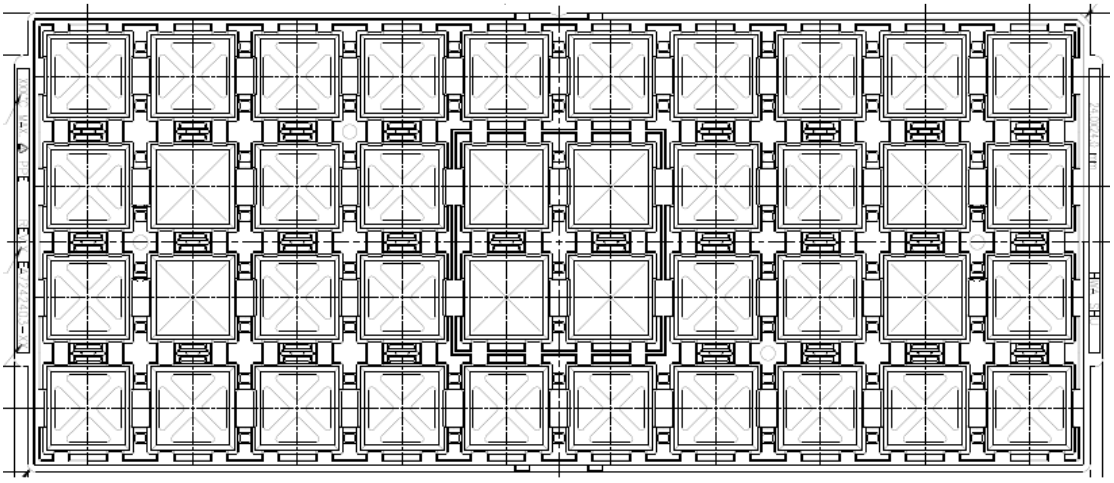

1. MEANS SURFACE RESISTIVITY OF THE TRAY. (EIA-541 STANDARD)
2. WIDTH：135.9 mm；LENGTH：315.0 mm；HEIGTH：7.62mm。
3. WARPAGE IS WITHIN 0.76 mm.
4. MATERIAL：PPE.
5. MAX TEMP：150℃.
6. TOTAL USABLE CEELS 4X10=40.

No	TITLE	Q'TY
1	Tray	40
2	Box	400
3	Carton	2400

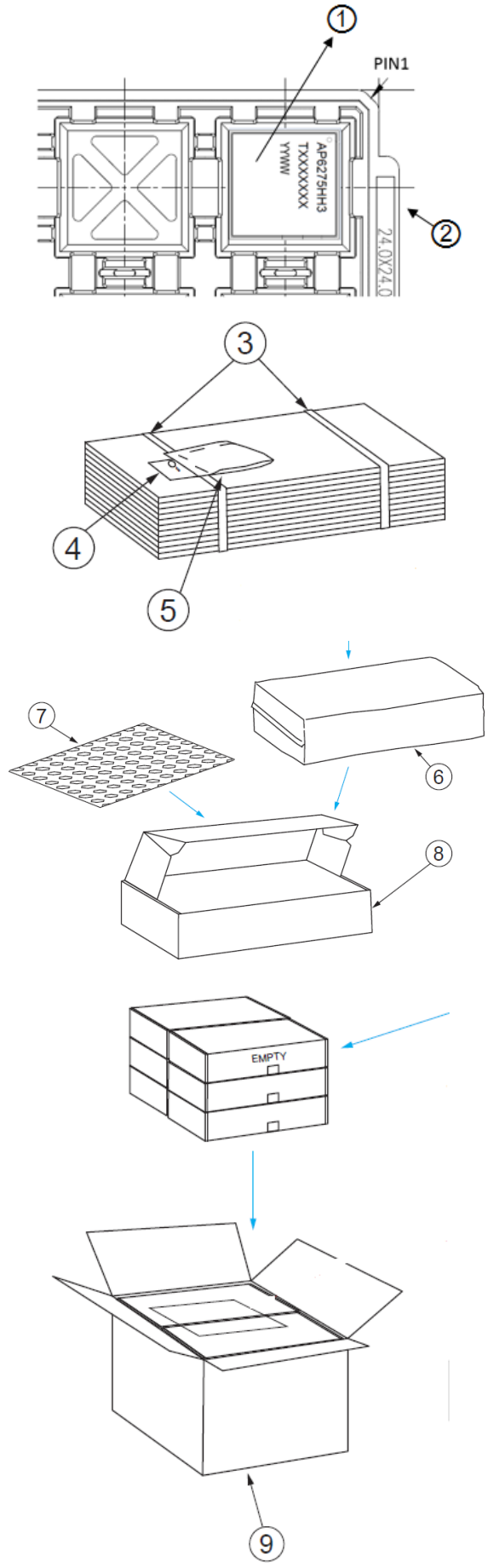
1
PIN1
AP6275HH3
TXXXXXXXX
YYWW
2
24.0X24.0
3
4
5
7
6
8
EMPTY
9
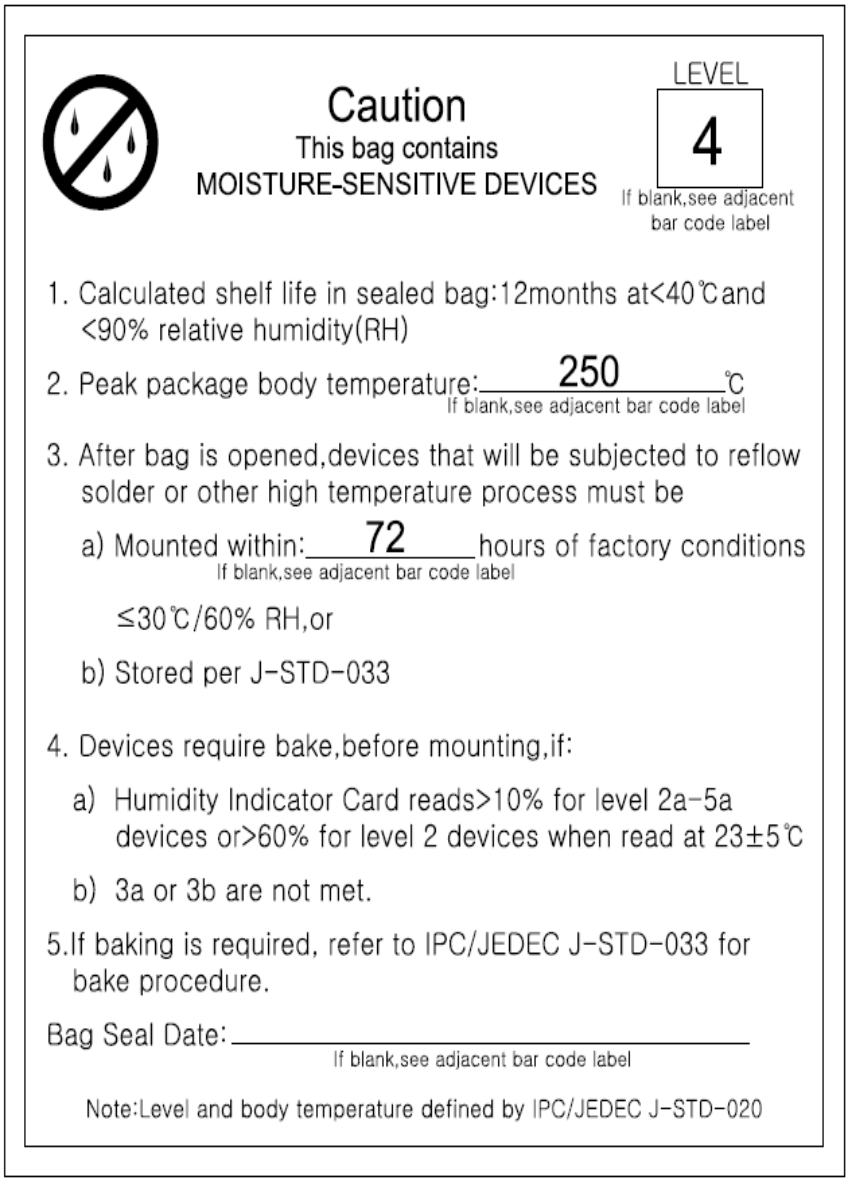
10.3 MSL Level / Storage Condition