AMPAK Technology Inc.

# 正基科技股份有限公司

# SPECIFICATION

**PRODUCT NAME**：AP12281_M2

**REVISION**：0.1(WEB)

**DATE**：Jan. 31th , 2024

| Customer APPROVED | |
|---|---|
| Company | |
| Representative Signature | |

| PREPARED | REVIEW | | | APPROVED | DCC ISSUE |
|---|---|---|---|---|---|
| | PM | QA | ET | | |
| | | | | | |

正基科技股份有限公司

AMPAK Technology Inc.

# AP12281_M2

## Data Sheet

Address:

6F.-2., No. 23, Huanke 1st Rd., Zhubei City, Hsinchu County 302047 , Taiwan

Website:

http://www.ampak.com.tw

# Revision

| Revision | Date | Description | Revised By |
|---|---|---|---|
| 0.1 | 2024/01/31 | - Preliminary | May |
| | | | |
| | | | |
| | | | |
| | | | |
| | | | |

# Contents

**DCC ISSUE** ..... 0
**Revision** ..... **1**
**1. Introduction** ..... **2**
1.1 Overview ..... 2
1.2 Product Features ..... 3
**2. General Specification** ..... **4**
2.1 General Specification ..... 4
2.2 DC Characteristics ..... 4
2.2.1 Absolute Maximum Ratings ..... 4
2.2.2 Recommended Operating Rating ..... 6
**3. Wi-Fi RF Specification** ..... **7**
3.1 2.4GHz RF Specification ..... 7
3.2 5GHz RF Specification ..... 9
3.3 6GHz RF Specification ..... 15
**4. Bluetooth Specification** ..... **18**
4.1 Bluetooth Specification ..... 18
**5. Pin Definition** ..... **19**
5.1 Pin Outline ..... 19
5.2 Pin Assignment ..... 20
**6. Dimensions** ..... **23**
6.1 Module Dimensions ..... 23
**7. External clock reference** ..... **24**
**8. Host Interface Timing Diagram** ..... **25**
8.1 Power-up Sequence Timing Diagram ..... 25
8.2 SDIO Interface Description ..... 27
8.4 UART Interface Description ..... 40
**9. Package Information** ..... **42**
9.1 Tray box ..... 42
9.2 Carton ..... 43

# 1. Introduction

## 1.1 Overview

The AMPAK Technology® AP12281_M2 is a fully Wi-Fi 6E, Bluetooth and IEEE 802.15.4/Thread functionalities module with seamless roaming capabilities and advance security, also it can associate with different vendors' Wi-Fi 6E or legacy Access Points / Routers and PF Path is with single stream. Furthermore, AP12281_M2 included SDIO v3.0/2.0 interface for Wi-Fi, UART/PCM/I2S interface for Bluetooth and UART interface for IEEE 802.15.4/Thread.

In addition, this compact module is a total solution for a combination of Wi-Fi + BT technologies. The module is specifically developed for tablet, OTT box and portable & mobile devices.

.

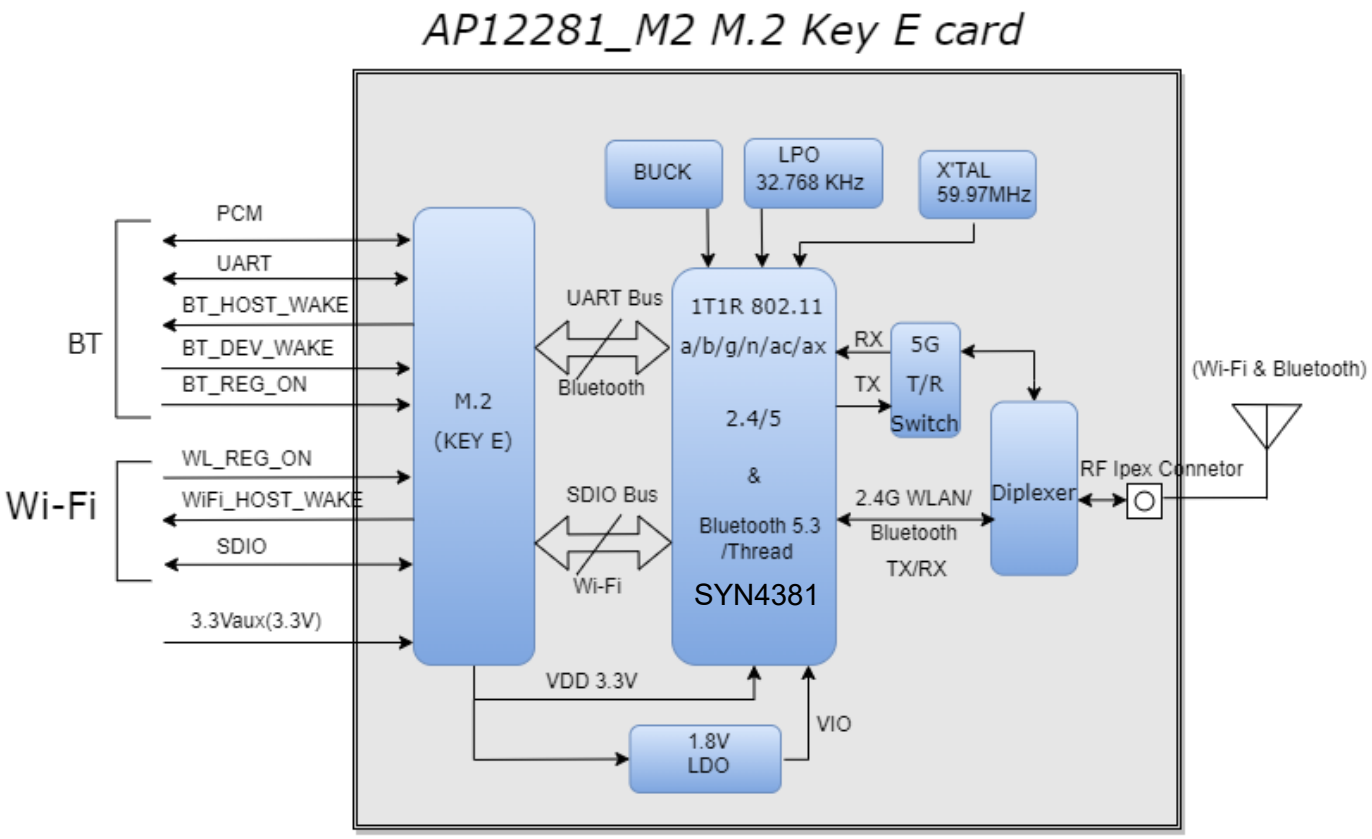

## 1.2 Product Features

### IEEE 802.11 Key Features

- 802.11ax/ac/a/b/g/n compliant
- Radio band support for 2.4 / 5 / 6 GHz band including 6GHz UNII-5,6,7,8
- Support 802.11ax & legacy for 2.4 / 5 GHz band
- Support 802.11ax only for 6GHz band
- Lead-free & Halogen-free design which is compliant with ROHS requirements.
- TX and RX low-density parity check (LDPC) support for improved range and power efficiency.
- Single-stream spatial multiplexing up to 600 Mbps data rate.
- 20, 40, 80 MHz bandwidth channels with optional SGI (1024 QAM modulation) for 5 / 6 GHz bands
- 20MHz channels for 2.4 GHz band with optional SGI (1024 QAM modulation)
- Supports standard SDIO v3.0/v2.0.

### Bluetooth Key Feature

- BT host digital interface:
  - HCI UART (up to 4 Mbps)
  - PCM for audio data
- Complies with Bluetooth Core Specification Version 5.3 with provisions for supporting future specifications. With Bluetooth Class 1 or Class2 transmitter operation.
- Supports extended synchronous connections (eSCO), for enhanced voice quality by allowing for retransmission of dropped packets.
- Adaptive frequency hopping (AFH) for reducing radio frequency interference.
  A simplified block diagram of the module is depicted in the figure above.
- BT Core Specification Version 5.3, including the following support:
  - Low energy(LE) isochronous channels
  - LE power control
  - LE enhanced connection update
  - LE channel classification
  - LE audio

### IEEE 802.15.4/Thread Key Feature

- Support IEEE 802.15.4/Thread that can act as Border Router.

# 2. General Specification

## 2.1 General Specification

| | |
|---|---|
| Model Name | AP12281_M2 |
| Product Description | 1T1R 802.11 a/b/g/n/ac/ax Wi-Fi 6E + BT 5.3+ IEEE 802.15.4/Thread Module 2230 M.2 card (KEY E) |
| Dimension | L x W : 30 x 22 mm (typical); H :2.8 mm (max.) |
| Wi-Fi Interface | Support SDIO V3.0/2.0 |
| BLUETOOTH Interface | UART / PCM |
| Operating temperature | -30°C to +85°C |
| Storage temperature | -40°C to 125°C |
| Humidity | Operating Humidity 10% to 95% Non-Condensing |

Note: The optimal RF performance specified in the data sheet, however, is guaranteed only -10 °C to +55 °C and 3.2V < VBAT < 3.6V without derating performance.

## 2.2 DC Characteristics

### 2.2.1 Absolute Maximum Ratings

| Symbol | Description | Min. | Max. | Unit |
|---|---|---|---|---|
| 3.3Vaux | Input supply voltage | -0.5 | 4.5 | V |
| WL_REG_ON | Used by PMU to power up or power down the internal regulators used by the WLAN section. | -0.5 | 3.9 | V |
| BT_REG_ON | Used by PMU to power up or power down the internal regulators used by the Bluetooth section. | | | |
| Digital Bus | UART / PCM Bus | | | |
| WL_HOST_WAKE | WLAN device wake-up HOST | | | |
| BT_HOST_WAKE | Bluetooth device wake-up HOST | | | |
| BT_DEV_WAKE | HOST wake-up Bluetooth device | | | |

Extreme caution must be exercised to prevent electrostatic discharge (ESD) damage.

| Symbol | Condition | ESD Rating | Unit |
|---|---|---|---|
| ESD_HAND_HBM | Human body model contact discharge per JEDEC EID/JESD22-A114 | 1 | kV |
| ESD_HAND_CDM | Charged device model contact discharge per JEDEC EIA/JESD22-C101 | 250 | V |

### 2.2.2 Recommended Operating Rating

| Voltage rails | Min. | Typ. | Max. | Unit |
|---|---|---|---|---|
| 3.3Vaux | 3.0 | 3.3 | 3.6 | V |
| WL_REG_ON | 1.62 | 1.8 | 1.98 | V |
| BT_REG_ON | | | | |
| Digital Bus | | | | |
| WL_HOST_WAKE | | | | |
| BT_HOST_WAKE | | | | |
| BT_DEV_WAKE | | | | |

3.3Vaux current consumption 1200mA(Peak), when 3.3Vaux = 3.3V

The module requires two power supplies: other Digital I/O Pins.

| For VDDIO=1.8V | Min. | Max. | Unit |
|---|---|---|---|
| VIL/VIH | 0.35×VDDIO | 0.65×VDDIO | V |
| VOL/VOH output@2mA | 0.4 | VDDIO-0.4 | V |

# 3. Wi-Fi RF Specification

## 3.1 2.4GHz RF Specification

Conditions : VBAT=3.3V ; VDDIO=1.8V ; Temp=25°C

| Feature | Description |
|---|---|
| **WLAN Standard** | IEEE 802.11 b/g/n/ax & Wi-Fi compliant |
| **Frequency Range** | 2400 MHz ~ 2483.5 MHz (2.4GHz ISM Band) |
| **Number of Channels** | 2400 MHz ~ 2483.5 MHz：Ch1 ~ Ch13 |
| **Modulation** | 802.11b : DQPSK、DBPSK、CCK<br>802.11g/n : OFDM /64-QAM、16-QAM、QPSK、BPSK<br>802.11ax : OFDMA /256-QAM、64-QAM、16-QAM、QPSK、BPSK |

**Output Power , tolerance ± 1.5 dB**

**The transmit EVM quality & spectrum mask are compliant with IEEE 802.11 standard**

| | | | | | |
|---|---|---|---|---|---|
| **802.11b** | **1Mbps** | **2Mbps** | **5.5Mbps** | **11Mbps** | |
| | 19 | 19 | 19 | 19 | |
| **802.11g** | **6、9Mbps** | **12、18Mbps** | **24Mbps** | **36Mbps** | **48Mbps** |
| | 19 | 19 | 18 | 18 | 17 |
| | **54Mbps** | | | | |
| | 17 | | | | |
| **802.11n 20MHz** | **MCS0~2** | **MCS3** | **MCS4** | **MCS5** | **MCS6** |
| | 18.5 | 18.5 | 18 | 17 | 16 |
| | **MCS7** | | | | |
| | 16 | | | | |
| **802.11ax 20MHz** | **HE0~2** | **HE3** | **HE4** | **HE5** | **HE6** |
| | **18.5** | 18.5 | 18 | 17 | 16 |
| | **HE7** | **HE8** | **HE9** | | |
| | **16** | 15.5 | 15 | | |

Note: The specifications of RF output power are subject to change to fulfill the safety regulation and requirements in end-user product.

**Sensitivity, tolerance ± 2 dB**

**CCK modulation PER ≦ 8%、OFDM modulation PER ≦ 10%**

| | | | | |
|---|---|---|---|---|
| **802.11b** | **Data Rate** | **Spec.(dBm)** | | |
| | **1Mbps** | -96 | | |
| | **2Mbps** | -90 | | |
| | **5.5Mbps** | -88 | | |
| | **11Mbps** | -87 | | |

| | | | | |
|---|---|---|---|---|
| 802.11g | Data Rate | Spec.(dBm) | Data Rate | Spec.(dBm) |
| | 6Mbps | -91 | 24Mbps | -83 |
| | 9Mbps | -88 | 36Mbps | -80 |
| | 12Mbps | -87 | 48Mbps | -76 |
| | 18Mbps | -85 | 54Mbps | -73 |
| 802.11n_20MHz | Data Rate | Spec.(dBm) | Data Rate | Spec.(dBm) |
| | MCS0 | -90 | MCS4 | -77 |
| | MCS1 | -87 | MCS5 | -75 |
| | MCS2 | -84 | MCS6 | -73 |
| | MCS3 | -80 | MCS7 | -72 |
| 802.11ax_20MHz | Data Rate | Spec.(dBm) | Data Rate | Spec.(dBm) |
| | HE0 | -90 | HE6 | -72 |
| | HE1 | -87 | HE7 | -71 |
| | HE2 | -84 | HE8 | -69 |
| | HE3 | -80 | HE9 | -68 |
| | HE4 | -77 | | |
| | HE5 | -75 | | |
| Maximum Input Level | 802.11b : -10 dBm | | | |
| | 802.11g/n/ax : -20 dBm | | | |

## 3.2 5GHz RF Specification

Conditions : VBAT=3.3V ; VDDIO=1.8V ; Temp=25°C

| Feature | Description |
|---|---|
| **WLAN Standard** | IEEE 802.11a/n/ac/ax & Wi-Fi compliant |
| **Frequency Range** | 5150~5350MHz、5470~5725MHz、5725~5850MHz (5GHz UNII Band) |
| **Number of Channels** | 5150~5350MHz：Ch36 ~ Ch64<br>5470~5725MHz：Ch100 ~ Ch140<br>5725~5850MHz：Ch149 ~ Ch165 |
| **Modulation** | 802.11a : OFDM /64-QAM、16-QAM、QPSK、BPSK<br>802.11n : OFDM /64-QAM、16-QAM、QPSK、BPSK<br>802.11ac : OFDM /256-QAM、64-QAM、16-QAM、QPSK、BPSK<br>802.11ax : OFDMA /1024-QAM、256-QAM、64-QAM、16-QAM、QPSK、BPSK |

**Output Power , tolerance ± 2 dB**

**The transmit EVM quality & spectrum mask are compliant with IEEE 802.11 standard**

| | | | | | |
|---|---|---|---|---|---|
| **802.11a** | **Frequency (MHz)** | **6~9Mbps** | **12~18Mbps** | **24Mbps** | **36Mbps** |
| | **5150~5350** | 15.5 | 15.5 | 15.5 | 15.5 |
| | **5470~5725** | 15.5 | 15.5 | 15.5 | 15.5 |
| | **5725~5850** | 15.5 | 15.5 | 15.5 | 15.5 |
| | **Frequency (MHz)** | **48Mbps** | **54Mbps** | | |
| | **5150~5350** | 15.5 | 15 | | |
| | **5470~5725** | 15.5 | 15 | | |
| | **5725~5850** | 15.5 | 15 | | |
| **802.11n 20MHz** | **Frequency (MHz)** | **MCS0~2** | **MCS3** | **MCS4** | **MCS5** |
| | **5150~5350** | 15.5 | 15.5 | 15.5 | 15.5 |
| | **5470~5725** | 15.5 | 15.5 | 15.5 | 15.5 |
| | **5725~5850** | 15.5 | 1.5 | 15.5 | 15.5 |
| | **Frequency (MHz)** | **MCS6** | **MCS7** | | |
| | **5150~5350** | 15 | 14.5 | | |
| | **5470~5725** | 15 | 14.5 | | |
| | **5725~5850** | 15 | 14.5 | | |

| | | | | | |
|---|---|---|---|---|---|
| 802.11n 40MHz | Frequency (MHz) | MCS0~2 | MCS3 | MCS4 | MCS5 |
| | 5150~5350 | 15 | 15 | 15 | 15 |
| | 5470~5725 | 15 | 15 | 15 | 15 |
| | 5725~5850 | 15 | 15 | 15 | 15 |
| | Frequency (MHz) | MCS6 | MCS7 | | |
| | 5150~5350 | 15 | 14 | | |
| | 5470~5725 | 15 | 14 | | |
| | 5725~5850 | 15 | 14 | | |
| 802.11ac 20MHz | Frequency (MHz) | MCS0~2 | MCS3 | MCS4 | MCS5 |
| | 5150~5350 | 15.5 | 15.5 | 15.5 | 15.5 |
| | 5470~5725 | 15.5 | 15.5 | 15.5 | 15.5 |
| | 5725~5850 | 15.5 | 1.5 | 15.5 | 15.5 |
| | Frequency (MHz) | MCS6 | MCS7 | MCS8 | |
| | 5150~5350 | 15 | 14.5 | 12.5 | |
| | 5470~5725 | 15 | 14.5 | 12.5 | |
| | 5725~5850 | 15 | 14.5 | 12.5 | |
| 802.11ac 40MHz | Frequency (MHz) | MCS0~2 | MCS3 | MCS4 | MCS5 |
| | 5150~5350 | 15 | 15 | 15 | 15 |
| | 5470~5725 | 15 | 15 | 15 | 15 |
| | 5725~5850 | 15 | 15 | 15 | 15 |
| | Frequency (MHz) | MCS6 | MCS7 | MCS8 | MCS9 |
| | 5150~5350 | 15 | 14 | 12 | 11 |
| | 5470~5725 | 15 | 14 | 12 | 11 |
| | 5725~5850 | 15 | 14 | 12 | 11 |
| 802.11ac 80MHz | Frequency (MHz) | MCS0~2 | MCS3 | MCS4 | MCS5 |
| | 5150~5350 | 15 | 15 | 15 | 15 |
| | 5470~5725 | 15 | 15 | 15 | 15 |
| | 5725~5850 | 15 | 15 | 15 | 15 |
| | Frequency (MHz) | MCS6 | MCS7 | MCS8 | MCS9 |
| | 5150~5350 | 15 | 14 | 12 | 11 |
| | 5470~5725 | 15 | 14 | 12 | 11 |
| | 5725~5850 | 15 | 14 | 12 | 11 |

| | | | | | |
|---|---|---|---|---|---|
| 802.11ax 20MHz | Frequency (MHz) | HE0~2 | HE3 | HE4 | HE5 |
| | 5150~5350 | 15.5 | 15.5 | 15.5 | 15.5 |
| | 5470~5725 | 15.5 | 15.5 | 15.5 | 15.5 |
| | 5725~5850 | 15.5 | 1.5 | 15.5 | 15.5 |
| | Frequency (MHz) | HE6 | HE7 | HE8 | HE9 |
| | 5150~5350 | 15 | 14.5 | 12.5 | 12 |
| | 5470~5725 | 15 | 14.5 | 12.5 | 12 |
| | 5725~5850 | 15 | 14.5 | 12.5 | 12 |
| | Frequency (MHz) | HE10 | HE11 | | |
| | 5150~5350 | 9.5 | 9.5 | | |
| | 5470~5725 | 9.5 | 9.5 | | |
| | 5725~5850 | 9.5 | 9.5 | | |
| 802.11ax 40MHz | Frequency (MHz) | HE0~2 | HE3 | HE4 | HE5 |
| | 5150~5350 | 15 | 15 | 15 | 15 |
| | 5470~5725 | 15 | 15 | 15 | 15 |
| | 5725~5850 | 15 | 15 | 15 | 15 |
| | Frequency (MHz) | HE6 | HE7 | HE8 | HE9 |
| | 5150~5350 | 15 | 14 | 12 | 11 |
| | 5470~5725 | 15 | 14 | 12 | 11 |
| | 5725~5850 | 15 | 14 | 12 | 11 |
| | Frequency (MHz) | HE10 | HE11 | | |
| | 5150~5350 | 9 | 9 | | |
| | 5470~5725 | 9 | 9 | | |
| | 5725~5850 | 9 | 9 | | |

| | | | | | |
|---|---|---|---|---|---|
| 802.11ax 80MHz | Frequency (MHz) | HE0~2 | HE3 | HE4 | HE5 |
| | 5150~5350 | 15 | 15 | 15 | 15 |
| | 5470~5725 | 15 | 15 | 15 | 15 |
| | 5725~5850 | 15 | 15 | 15 | 15 |
| | Frequency (MHz) | HE6 | HE7 | HE8 | HE9 |
| | 5150~5350 | 15 | 14 | 12 | 11 |
| | 5470~5725 | 15 | 14 | 12 | 11 |
| | 5725~5850 | 15 | 14 | 12 | 11 |
| | Frequency (MHz) | HE10 | HE11 | | |
| | 5150~5350 | 8 | 8 | | |
| | 5470~5725 | 8 | 8 | | |
| | 5725~5850 | 8 | 8 | | |
| Note: The specifications of RF output power are subject to change to fulfill the safety regulation and requirements in end-user product. | | | | | |

| Sensitivity, tolerance ± 2 dB<br>CCK modulation PER ≦ 8%、OFDM modulation PER ≦ 10% | | | | |
|---|---|---|---|---|
| 802.11a | Data Rate | Spec.(dBm) | Data Rate | Spec.(dBm) |
| | 6Mbps | -90 | 24Mbps | -83 |
| | 9Mbps | -90 | 36Mbps | -80 |
| | 12Mbps | -88 | 48Mbps | -75 |
| | 18Mbps | -86 | 54Mbps | -73 |
| 802.11n_20MHz | Data Rate | Spec.(dBm) | Data Rate | Spec.(dBm) |
| | MCS0 | -90 | MCS4 | -79 |
| | MCS1 | -88 | MCS5 | -76 |
| | MCS2 | -86 | MCS6 | -73 |
| | MCS3 | -83 | MCS7 | -72 |
| 802.11n_40MHz | Data Rate | Spec.(dBm) | Data Rate | Spec.(dBm) |
| | MCS0 | -88 | MCS4 | -77 |
| | MCS1 | -86 | MCS5 | -72 |
| | MCS2 | -83 | MCS6 | -70 |
| | MCS3 | -80 | MCS7 | -69 |
| 802.11ac_20MHz | Data Rate | Spec.(dBm) | Data Rate | Spec.(dBm) |
| | MCS0 | -90 | MCS5 | -75 |
| | MCS1 | -88 | MCS6 | -73 |
| | MCS2 | -86 | MCS7 | -70 |
| | MCS3 | -83 | MCS8 | -68 |
| | MCS4 | -79 | | |
| 802.11ac_40MHz | Data Rate | Spec.(dBm) | Data Rate | Spec.(dBm) |
| | MCS0 | -88 | MCS5 | -72 |

| | | | | |
|---|---|---|---|---|
| | **MCS1** | -86 | **MCS6** | -70 |
| | **MCS2** | -83 | **MCS7** | -69 |
| | **MCS3** | -80 | **MCS8** | -65 |
| | **MCS4** | -76 | **MCS9** | -64 |
| **802.11ac_80MHz** | **Data Rate** | **Spec.(dBm)** | **Data Rate** | **Spec.(dBm)** |
| | **MCS0** | -85 | **MCS5** | -68 |
| | **MCS1** | -82 | **MCS6** | -67 |
| | **MCS2** | -79 | **MCS7** | -65 |
| | **MCS3** | -76 | **MCS8** | -62 |
| | **MCS4** | -73 | **MCS9** | -61 |

| | | | | |
|---|---|---|---|---|
| 802.11ax_20MHz | Data Rate | Spec.(dBm) | Data Rate | Spec.(dBm) |
| | HE0 | -90 | HE6 | -73 |
| | HE1 | -88 | HE7 | -70 |
| | HE2 | -86 | HE8 | -68 |
| | HE3 | -83 | HE9 | -64 |
| | HE4 | -79 | HE10 | -59 |
| | HE5 | -75 | HE11 | -57 |
| 802.11ax_40MHz | Data Rate | Spec.(dBm) | Data Rate | Spec.(dBm) |
| | HE0 | -88 | HE6 | -70 |
| | HE1 | -86 | HE7 | -69 |
| | HE2 | -83 | HE8 | -65 |
| | HE3 | -80 | HE9 | -64 |
| | HE4 | -76 | HE10 | -60 |
| | HE5 | -72 | HE11 | -55 |
| 802.11ax_80MHz | Data Rate | Spec.(dBm) | Data Rate | Spec.(dBm) |
| | HE0 | -85 | HE6 | -67 |
| | HE1 | -82 | HE7 | -65 |
| | HE2 | -79 | HE8 | -62 |
| | HE3 | -76 | HE9 | -61 |
| | HE4 | -73 | HE10 | -57 |
| | HE5 | -68 | HE11 | -53 |
| Maximum Input Level | 802.11a/n/ac/ax : -30 dBm | | | |

## 3.3 6GHz RF Specification

Conditions : VBAT=3.3V ; VDDIO=1.8V ; Temp=25°C

| Feature | Description |
|---|---|
| **WLAN Standard** | IEEE 802.11ax & Wi-Fi compliant |
| **Frequency Range** | 5925~7125MHz (6GHz U-NII5, U-NII6, U-NII-7, U-NII-8 Band) |
| **Number of Channels** | 5925~6425MHz：6G1 ~ 6G93<br>6425~6525MHz：6G97 ~ 6G113<br>6525~6875MHz：6G117~6G181<br>6875~7125MHz：6G185~6G233 |
| **Modulation** | 802.11ax : OFDMA /1024-QAM、256-QAM、64-QAM、16-QAM、QPSK、BPSK |

**Output Power , tolerance ± 2 dB**

**The transmit EVM quality & spectrum mask are compliant with IEEE 802.11 standard**

| | | | | | |
|---|---|---|---|---|---|
| **802.11ax 20MHz** | **Frequency (MHz)** | **HE0~2** | **HE3** | **HE4** | **HE5** |
| | **5925~6425** | 14.5 | 14 | 14 | 14 |
| | **6425~6525** | 14.5 | 14 | 14 | 14 |
| | **6525~6875** | 14 | 14 | 14 | 14 |
| | **6875~7125** | 14 | 14 | 14 | 14 |
| | **Frequency (MHz)** | **HE6** | **HE7** | **HE8** | **HE9** |
| | **5925~6425** | 14 | 13 | 11.5 | 10.5 |
| | **6425~6525** | 14 | 13 | 11.5 | 10.5 |
| | **6525~6875** | 14 | 13 | 11.5 | 10.5 |
| | **6875~7125** | 13 | 12 | 10 | 9 |
| | **Frequency (MHz)** | **HE10** | **HE11** | | |
| | **5925~6425** | 9 | 9 | | |
| | **6425~6525** | 9 | 9 | | |
| | **6525~6875** | 9 | 9 | | |
| | **6875~7125** | 8 | 8 | | |
| **802.11ax 40MHz** | **Frequency (MHz)** | **HE0~2** | **HE3** | **HE4** | **HE5** |
| | **5925~6425** | 14.5 | 14 | 14 | 14 |
| | **6425~6525** | 14.5 | 14 | 14 | 14 |
| | **6525~6875** | 14 | 14 | 14 | 14 |
| | **6875~7125** | 14 | 14 | 14 | 14 |
| | **Frequency (MHz)** | **HE6** | **HE7** | **HE8** | **HE9** |
| | **5925~6425** | 13.5 | 12.5 | 10.5 | 9 |
| | **6425~6525** | 13.5 | 12.5 | 10.5 | 9.5 |
| | **6525~6875** | 13.5 | 12.5 | 10.5 | 9.5 |
| | **6875~7125** | 13 | 12 | 10 | 9 |

| | | | | | |
|---|---|---|---|---|---|
| | Frequency (MHz) | HE10 | HE11 | | |
| | 5925~6425 | 8 | 8 | | |
| | 6425~6525 | 8.5 | 8.5 | | |
| | 6525~6875 | 8.5 | 8.5 | | |
| | 6875~7125 | 7.5 | 7.5 | | |
| 802.11ax 80MHz | Frequency (MHz) | HE0~2 | HE3 | HE4 | HE5 |
| | 5925~6425 | 14.5 | 14 | 14 | 14 |
| | 6425~6525 | 14.5 | 14 | 14 | 14 |
| | 6525~6875 | 14 | 14 | 14 | 14 |
| | 6875~7125 | 14 | 14 | 14 | 14 |
| | Frequency (MHz) | HE6 | HE7 | HE8 | HE9 |
| | 5925~6425 | 13.5 | 12.5 | 10.5 | 9.5 |
| | 6425~6525 | 13.5 | 12.5 | 10.5 | 9.5 |
| | 6525~6875 | 13.5 | 12.5 | 10.5 | 9.5 |
| | 6875~7125 | 13 | 12 | 10 | 8.5 |
| | Frequency (MHz) | HE10 | HE11 | | |
| | 5925~6425 | 8.5 | 8.5 | | |
| | 6425~6525 | 8.5 | 8.5 | | |
| | 6525~6875 | 8.5 | 8.5 | | |
| | 6875~7125 | 7.5 | 7.5 | | |

Note: The specifications of RF output power are subject to change to fulfill the safety regulation and requirements in end-user product.

**Sensitivity, tolerance ± 2 dB, OFDM modulation PER ≦ 10%**

| | | | | |
|---|---|---|---|---|
| 802.11ax_20MHz SISO | Data Rate | Spec.(dBm) | Data Rate | Spec.(dBm) |
| | HE0 | -88 | HE6 | -71 |
| | HE1 | -86 | HE7 | -68 |
| | HE2 | -84 | HE8 | -66 |
| | HE3 | -83 | HE9 | -62 |
| | HE4 | -77 | HE10 | -57 |
| | HE5 | -73 | HE11 | -55 |
| 802.11ax_20MHz MIMO | Data Rate | Spec.(dBm) | Data Rate | Spec.(dBm) |
| | HE0 | -88 | HE6 | -71 |
| | HE1 | -86 | HE7 | -68 |
| | HE2 | -84 | HE8 | -66 |
| | HE3 | -81 | HE9 | -62 |
| | HE4 | -77 | HE10 | -57 |
| | HE5 | -73 | HE11 | -54 |
| 802.11ax_40MHz SISO | Data Rate | Spec.(dBm) | Data Rate | Spec.(dBm) |
| | HE0 | -86 | HE6 | -68 |

| | | | | |
|---|---|---|---|---|
| | HE1 | -84 | HE7 | -67 |
| | HE2 | -81 | HE8 | -63 |
| | HE3 | -78 | HE9 | -62 |
| | HE4 | -74 | HE10 | -68 |
| | HE5 | -70 | HE11 | -53 |
| 802.11ax_40MHz MIMO | Data Rate | Spec.(dBm) | Data Rate | Spec.(dBm) |
| | HE0 | -85 | HE6 | -68 |
| | HE1 | -84 | HE7 | -67 |
| | HE2 | -81 | HE8 | -63 |
| | HE3 | -78 | HE9 | -62 |
| | HE4 | -74 | HE10 | -58 |
| | HE5 | -70 | HE11 | -53 |
| 802.11ax_80MHz SISO | Data Rate | Spec.(dBm) | Data Rate | Spec.(dBm) |
| | HE0 | -83 | HE6 | -65 |
| | HE1 | -80 | HE7 | -63 |
| | HE2 | -77 | HE8 | -60 |
| | HE3 | -74 | HE9 | -59 |
| | HE4 | -71 | HE10 | -55 |
| | HE5 | -66 | HE11 | -51 |
| 802.11ax_80MHz MIMO | Data Rate | Spec.(dBm) | Data Rate | Spec.(dBm) |
| | HE0 | -82 | HE6 | -65 |
| | HE1 | -80 | HE7 | -63 |
| | HE2 | -77 | HE8 | -60 |
| | HE3 | -74 | HE9 | -59 |
| | HE4 | -71 | HE10 | -55 |
| | HE5 | -66 | HE11 | -50 |
| Maximum Input Level | 802.11ax : -30dBm | | | |

# 4. Bluetooth Specification

## 4.1 Bluetooth Specification

Conditions : VBAT=3.3V ; VDDIO=1.8V ; Temp:25°C

| Feature | Description |
|---|---|
| ***General Specification*** | |
| Bluetooth Standard | BDR(1Mbps)、EDR(2、3Mbps)、LE(1Mbps)、2LE(2Mbps) |
| Host Interface | UART |
| Frequency Band | 2402 MHz ~ 2480 MHz |
| Number of Channels | 79 channels for classic、40 channels for BLE |
| Modulation | GFSK, π/4-DQPSK, 8DPSK |
| ***RF Specification*** | |
| **Output Power , tolerance ± 2.5 dB** | |
| | **CL1** (dBm) |
| BDR Output Power | 7 |
| EDR Output Power | 6 |
| BLE Output Power | 7 |
| **Sensitivity, tolerance ± 2 dB** | |
| Sensitivity @ BER=0.1% for GFSK (1Mbps) | -87 dBm |
| Sensitivity @ BER=0.01% for π/4-DQPSK (2Mbps) | -89 dBm |
| Sensitivity @ BER=0.01% for 8DPSK (3Mbps) | -84 dBm |
| Sensitivity @ PER=30.8% for LE (1Mbps) | -90 dBm |
| Sensitivity @ PER=30.8% for 2LE (2Mbps) | -90 dBm |
| Maximum Input Level | GFSK (1Mbps):-20dBm |
| | π/4-DQPSK (2Mbps) :-20dBm |
| | 8DPSK (3Mbps) :-20dBm |

Note*：The Bluetooth BDR output power is able to be configured by firmware (hcd file).

# 5. Pin Definition

## 5.1 Pin Outline

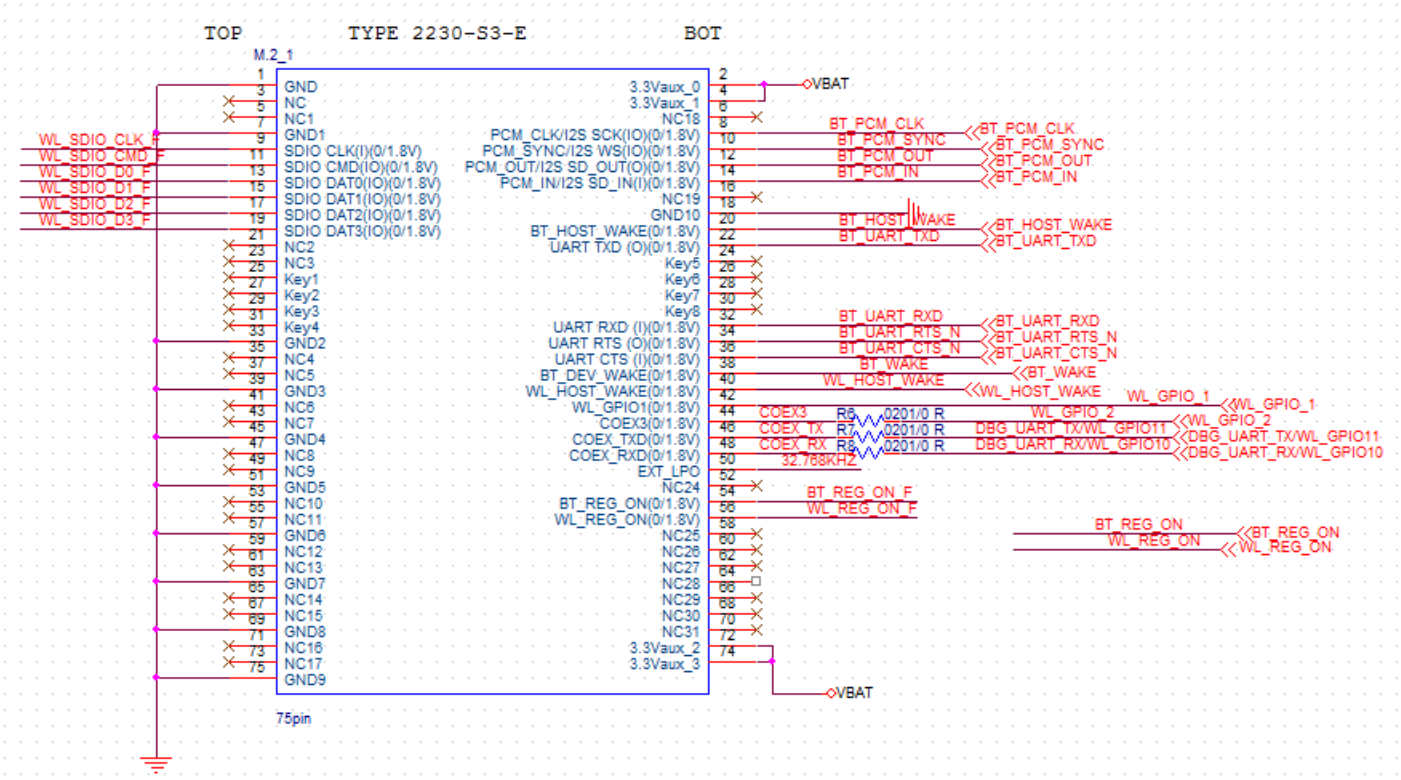

## 5.2 Pin Assignment

| NO | Name | Type | Description |
|---|---|---|---|
| | | TOP | |
| 1 | GND | G | Ground connections |
| 3 | NC | — | No connect |
| 5 | NC | — | No connect |
| 7 | GND | G | Ground connections |
| 9 | SDIO_CLK | I | SDIO clock line |
| 11 | SDIO_CMD | I/O | SDIO command line |
| 13 | SDIO_DATA_0 | I/O | SDIO data line 0 |
| 15 | SDIO_DATA_1 | I/O | SDIO data line 1 |
| 17 | SDIO_DATA_2 | I/O | SDIO data line 2 |
| 19 | SDIO_DATA_3 | I/O | SDIO data line 3 |
| 21 | NC | — | No connect |
| 23 | NC | — | No connect |
| | Module Key | — | Mechanical Key |
| | Module Key | — | Mechanical Key |
| | Module Key | — | Mechanical Key |
| | Module Key | — | Mechanical Key |
| 33 | GND | G | Ground connections |
| 35 | NC | — | No connect |
| 37 | NC | — | No connect |
| 39 | GND | G | Ground connections |
| 41 | NC | — | No connect |
| 43 | NC | — | No connect |
| 45 | GND | G | Ground connections |
| 47 | NC | — | No connect |
| 49 | NC | — | No connect |
| 51 | GND | G | Ground connections |
| 53 | NC | — | No connect |
| 55 | NC | — | No connect |
| 57 | GND | G | Ground connections |
| 59 | NC | — | No connect |
| 61 | NC | — | No connect |
| 63 | GND | G | Ground connections |
| 65 | NC | — | No connect |
| 67 | NC | — | No connect |

| | | | |
|---|---|---|---|
| **69** | GND | G | Ground connections |
| **71** | NC | — | No connect |
| **73** | NC | — | No connect |
| **75** | GND | G | Ground connections |
| | BOTTOM | | |
| **2** | 3.3Vaux | P | VDD system power supply input |
| **4** | 3.3Vaux | P | VDD system power supply input |
| **6** | NC | — | No connect |
| **8** | PCM_CLK (1.8V) | I/O | PCM clock |
| **10** | PCM_SYNC (1.8V) | I/O | PCM sync signal |
| **12** | PCM_OUT (1.8V) | O | PCM Data output |
| **14** | PCM_IN (1.8V) | I | PCM data input |
| **16** | NC | — | No connect |
| **18** | GND | G | Ground connections |
| **20** | BT_HOST_WAKE (1.8V) | O | Bluetooth wake up Host |
| **22** | UART_TXD (1.8V) | O | Bluetooth UART interface |
| | Module Key | — | Mechanical Key |
| | Module Key | — | Mechanical Key |
| | Module Key | — | Mechanical Key |
| | Module Key | — | Mechanical Key |
| **32** | UART_RXD (1.8V) | I | Bluetooth UART interface |
| **34** | UART_RTS_N (1.8V) | O | Bluetooth UART interface |
| **36** | UART_CTS_N (1.8V) | I | Bluetooth UART interface |
| **38** | BT_DEV_WAKE (1.8V) | I | HOST wake-up Bluetooth device |
| **40** | WL_HOST_WAKE (1.8V) | O | WLAN wake up HOST |
| **42** | WL_GPIO1(1.8V) | I/O | GPIO |
| **44** | WL_GPIO2(1.8V) | I/O | GPIO |
| **46** | GPIO11(1.8V) | I/O | UART Debug TX |
| **48** | GPIO10(1.8V) | I/O | UART Debug RX |
| **50** | NC | — | No connect |
| **52** | NC | — | No connect |
| **54** | BT_REG_ON (1.8V) | I | Used by PMU to power up or power down the internal module regulators used by the Bluetooth section. |
| **56** | WL_REG_ON (1.8V) | I | Used by PMU to power up or power down the internal module regulators used by the WLAN section. |
| **58** | NC | — | No connect |
| **60** | NC | — | No connect |
| **62** | NC | — | No connect |
| **64** | NC | — | No connect |

| | | | |
|---|---|---|---|
| **66** | NC | — | No connect |
| **68** | NC | — | No connect |
| **70** | NC | — | No connect |
| **72** | 3.3Vaux | P | VDD system power supply input |
| **74** | 3.3Vaux | P | VDD system power supply input |

# 6. Dimensions

## 6.1 Module Dimensions

(Unit: mm)

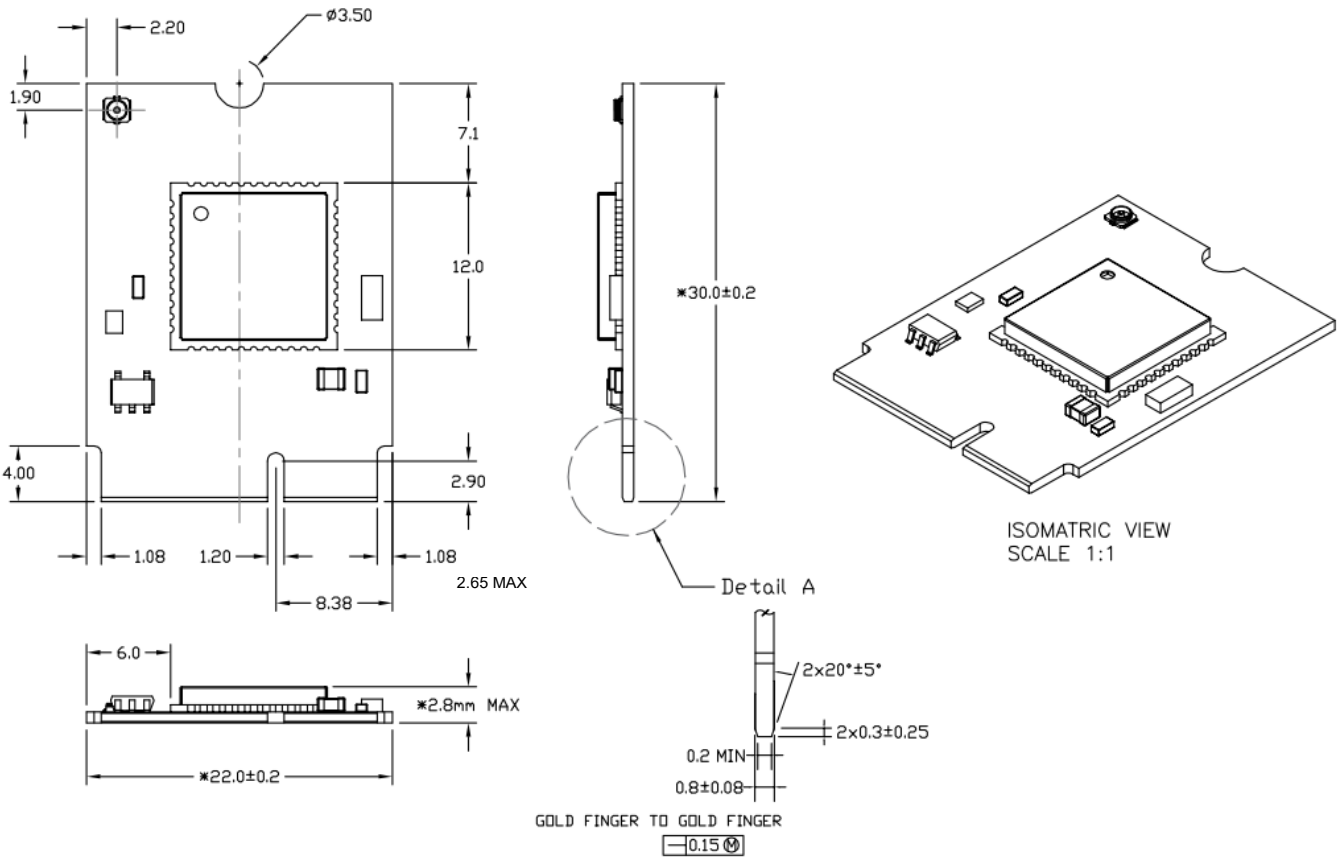


GENERAL TOLERANCE IS ±0.10mm
UNLESS OTHERWISE SPECIFIED

# 7. External clock reference

External LPO signal characteristics

| Parameter | Specification | Units |
|---|---|---|
| Nominal input frequency | 32.768 | kHz |
| Frequency accuracy | +/-25 | ppm |
| Duty cycle | 30 - 70 | % |
| Input signal amplitude | 1.8±0.09 | V |
| Signal type | Square-wave or sine-wave | - |
| Input impedance | >100k<br><5 | Ω<br>pF |
| Clock jitter (integrated over 300Hz – 15KHz) | <1 | Hz |
| Output high voltage | 0.7Vio - Vio | V |

External 59.97MHz Crystal characteristics

| Parameter | Specification | Units |
|---|---|---|
| Nominal frequency - F0 | 59.97 | MHz |
| Frequency Tolerance - ΔF / F 0<br>(At 25℃ +/- 3℃) | +/- 10 | ppm |
| Operation Temperature Range - Topr | -30 ~ + 85 | ℃ |
| Freq. Stability(over operating temperature) - TC<br>Ref. to 25℃ | +/- 10 | ppm |
| Load capacitance - CL | 8 | pF |
| Equivalent Series Resistance – ESR | Max. 50 | Ω |
| Drive Level - DL | Max. 200 | uW |
| Insulation resistance – IR<br>At 100Vdc | Min. 500 | MΩ |

# 8. Host Interface Timing Diagram

## 8.1 Power-up Sequence Timing Diagram

The module has signals that allow the host to control power consumption by enabling or disabling the Bluetooth, WLAN and internal regulator blocks. These signals are described below.
Additionally, diagrams are provided to indicate proper sequencing of the signals for carious operating states. The timing value indicated are minimum required values: longer delays are also acceptable.

- WL_REG_ON: Used by the PMU to power up or power down the internal regulators used by the WLAN section. When this pin is high, the regulators are enabled and the WLAN section is out of reset. When this pin is low the WLAN section is in reset.
- BT_REG_ON: Used by the PMU to power up or power down the internal regulators used by the BT section. Low asserting reset for Bluetooth. This pin has no effect on WLAN and does not control any PMU functions. This pin must be driven high or low (not left floating).

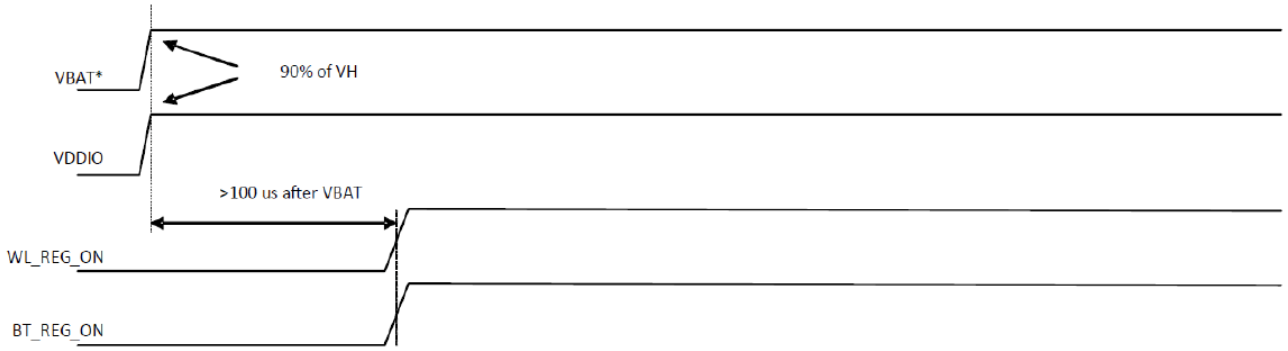


*Notes:
1. The VBAT and VDDIO 10%–90% rise-time slopes must be greater than 50 microseconds/V.
2. VBAT should be up before or at the same time as VDDIO . VDDIO should NOT be present first or be held high before VBAT is high .

WLAN=ON, Bluetooth=ON

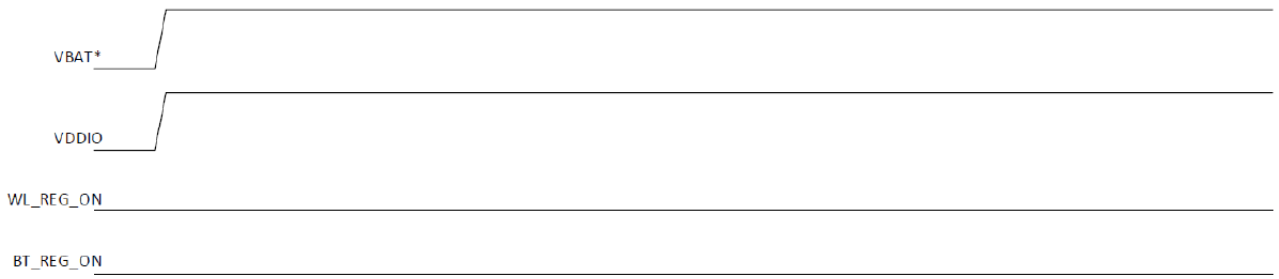


*Notes:
1. The VBAT and VDDIO 10%–90% rise-time slopes must be greater than 50 microseconds/V.
2. VBAT should be up before or at the same time as VDDIO. VDDIO should NOT be present first or be held high before VBAT is high.

WLAN=OFF, Bluetooth=OFF

***Notes:**
1. The VBAT and VDDIO 10%–90% rise-time slopes must be greater than 50 microseconds/V.
2. VBAT should be up before or at the same time as VDDIO. VDDIO should NOT be present first or be held high before VBAT is high.

WLAN=ON, Bluetooth=OFF

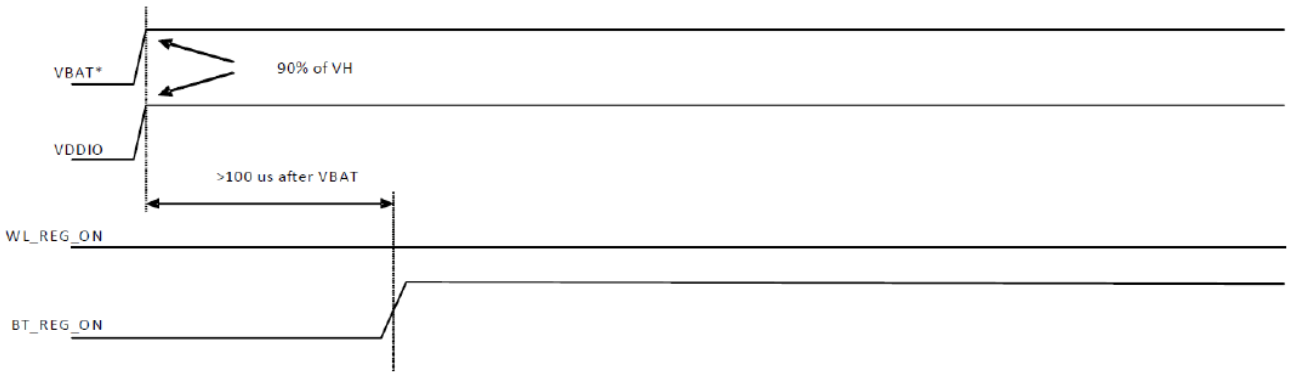


WLAN=OFF, Bluetooth=ON

## 8.2 SDIO Interface Description

The module supports SDIO version 3.0 for all 1.8V 4-bit UHSI speeds: SDR50(100 Mbps),SDR104(208MHz) and DDR50(50MHz, dual rates). It has the ability to stop the SDIO clock and map the interrupt signal into a GPIO pin. This 'out-of-band' interrupt signal notifies the host when the WLAN device wants to turn on the SDIO interface. The ability to force the control of the gated clocks from within the WLAN chip is also provided.

- Function 0 Standard SDIO function (Max BlockSize / ByteCount = 32B)
- Function 1 Backplane Function to access the internal System On Chip (SOC) address space (Max BlockSize / ByteCount = 64B)
- Function 2 WLAN Function for efficient WLAN packet transfer through DMA (Max BlockSize/ByteCount=512B)

SDIO Pin Description

| **SD 4-Bit Mode** | |
|---|---|
| DATA0 | Data Line 0 |
| DATA1 | Data Line 1 or Interrupt |
| DATA2 | Data Line 2 or Read Wait |
| DATA3 | Data Line 3 |
| CLK | Clock |
| CMD | Command Line |

# SDIO Default Mode Timing Diagram

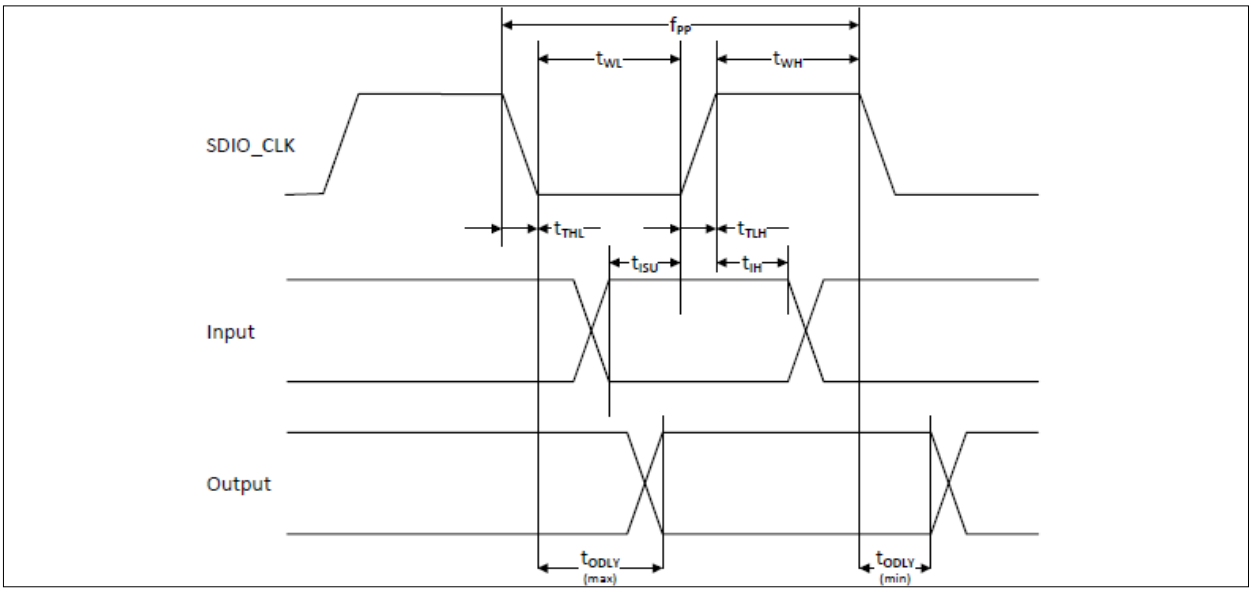


| Parameter | Symbol | Minimum | Typical | Maximum | Unit |
|---|---|---|---|---|---|
| ***SDIO CLK (All values are referred to minimum VIH and maximum VIL[b])*** | | | | | |
| Frequency – Data Transfer mode | fPP | 0 | – | 25 | MHz |
| Frequency – Identification mode | fOD | 0 | – | 400 | kHz |
| Clock low time | tWL | 10 | – | – | ns |
| Clock high time | tWH | 10 | – | – | ns |
| Clock rise time | tTLH | – | – | 10 | ns |
| Clock low time | tTHL | – | – | 10 | ns |
| ***Inputs: CMD, DAT (referenced to CLK)*** | | | | | |
| Input setup time | tISU | 5 | – | – | ns |
| Input hold time | tIH | 5 | – | – | ns |
| ***Outputs: CMD, DAT (referenced to CLK)*** | | | | | |
| Output delay time – Data Transfer mode | tODLY | 0 | – | 14 | ns |
| Output delay time – Identification mode | tODLY | 0 | – | 50 | ns |

a. Timing is based on CL ≤ 40pF load on CMD and Data.
b. min(Vih) = 0.7 × VDDIO and max(Vil) = 0.2 × VDDIO.

# SDIO High Speed Mode Timing Diagram

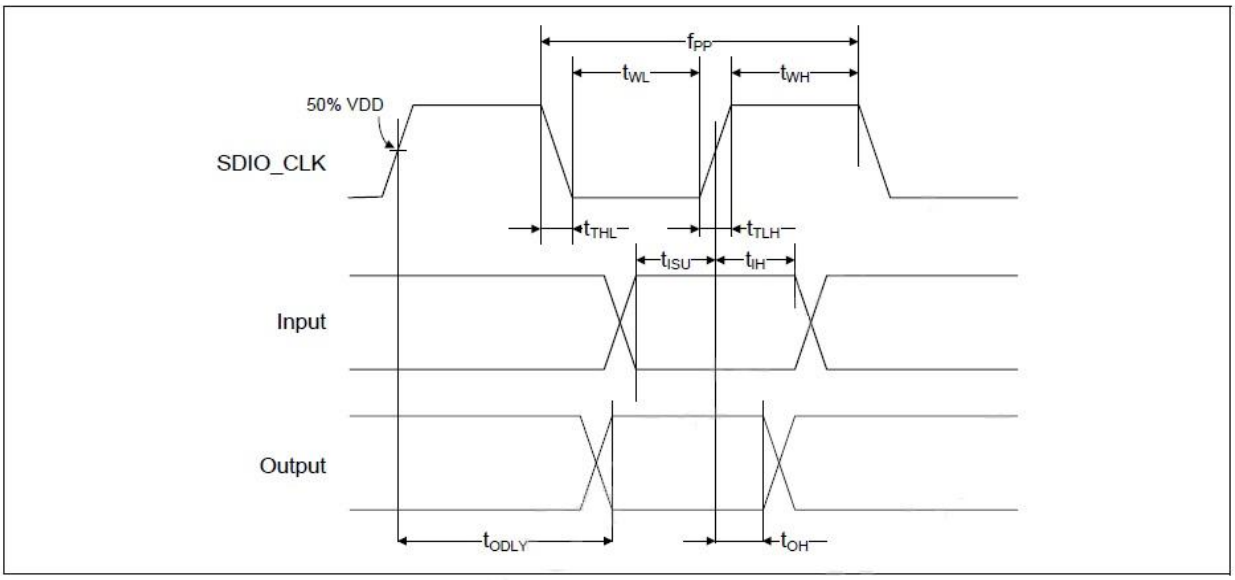


| Parameter | Symbol | Minimum | Typical | Maximum | Unit |
|---|---|---|---|---|---|
| ***SDIO CLK (all values are referred to minimum VIH and maximum VIL[b])*** | | | | | |
| Frequency – Data Transfer Mode | fPP | 0 | – | 50 | MHz |
| Frequency – Identification Mode | fOD | 0 | – | 400 | kHz |
| Clock low time | tWL | 7 | – | – | ns |
| Clock high time | tWH | 7 | – | – | ns |
| Clock rise time | tTLH | – | – | 3 | ns |
| Clock low time | tTHL | – | – | 3 | ns |
| ***Inputs: CMD, DAT (referenced to CLK)*** | | | | | |
| Input setup Time | tISU | 6 | – | – | ns |
| Input hold Time | tIH | 2 | – | – | ns |
| ***Outputs: CMD, DAT (referenced to CLK)*** | | | | | |
| Output delay time – Data Transfer Mode | tODLY | – | – | 14 | ns |
| Output hold time | tOH | 2.5 | – | – | ns |
| Total system capacitance (each line) | CL | – | – | 40 | pF |

a. Timing is based on CL ≤ 40 pF load on CMD and Data.
b. min(Vih) = 0.7 × VDDIO and max(Vil) = 0.2 × VDDIO.

# SDIO Bus Timing Specifications in SDR Modes

## Clock timing (SDR Modes)

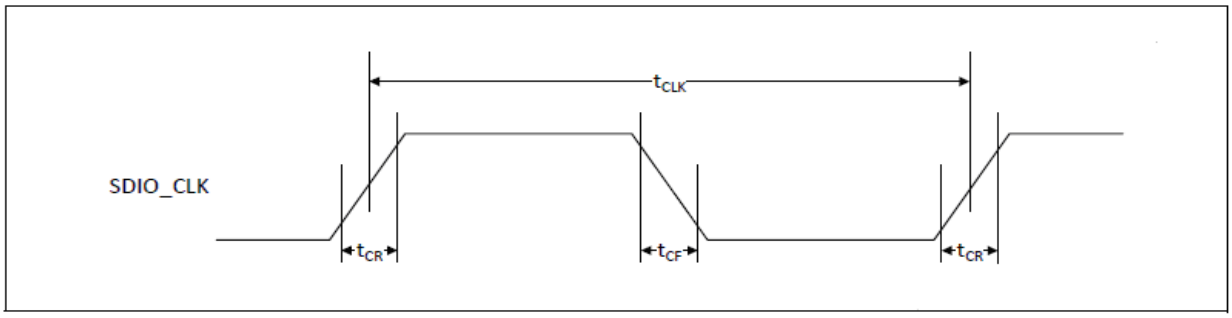


| Parameter | Symbol | Minimum | Maximum | Unit | Comments |
|---|---|---|---|---|---|
| – | $t_{CLK}$ | 40 | – | ns | SDR12 mode |
| | | 20 | – | ns | SDR25 mode |
| | | 10 | – | ns | SDR50 mode |
| | | 4.8 | – | ns | SDR104 mode |
| – | $t_{CR}$, $t_{CF}$ | – | $0.2 \times t_{CLK}$ | ns | $t_{CR}$, $t_{CF}$ < 2.00 ns (max) @100 MHz, $C_{CARD}$ = 10 pF<br>$t_{CR}$, $t_{CF}$ < 0.96 ns (max) @208 MHz, $C_{CARD}$ = 10 pF |
| Clock duty | – | 30 | 70 | % | – |

## SDIO Bus Input timing (SDR Modes)

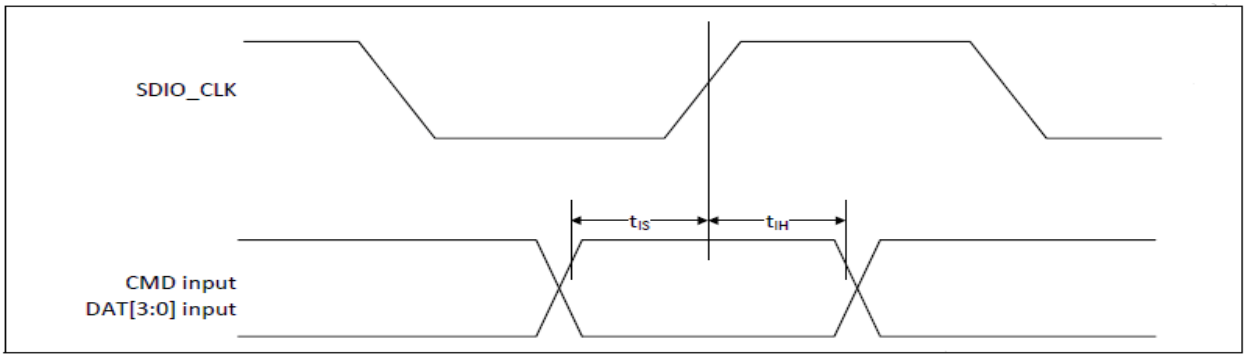


| Symbol | Minimum | Maximum | Unit | Comments |
|---|---|---|---|---|
| ***SDR104 Mode*** | | | | |
| $t_{IS}$ | 1.4 | – | ns | $C_{CARD}$ = 10 pF, VCT = 0.975V |
| $t_{IH}$ | 0.80 | – | ns | $C_{CARD}$ = 5 pF, VCT = 0.975V |
| ***SDR50 Mode*** | | | | |
| $t_{IS}$ | 3.00 | – | ns | $C_{CARD}$ = 10 pF, VCT = 0.975V |
| $t_{IH}$ | 0.80 | – | ns | $C_{CARD}$ = 5 pF, VCT = 0.975V |

SDIO Bus output timing (SDR Modes up to 100MHz)

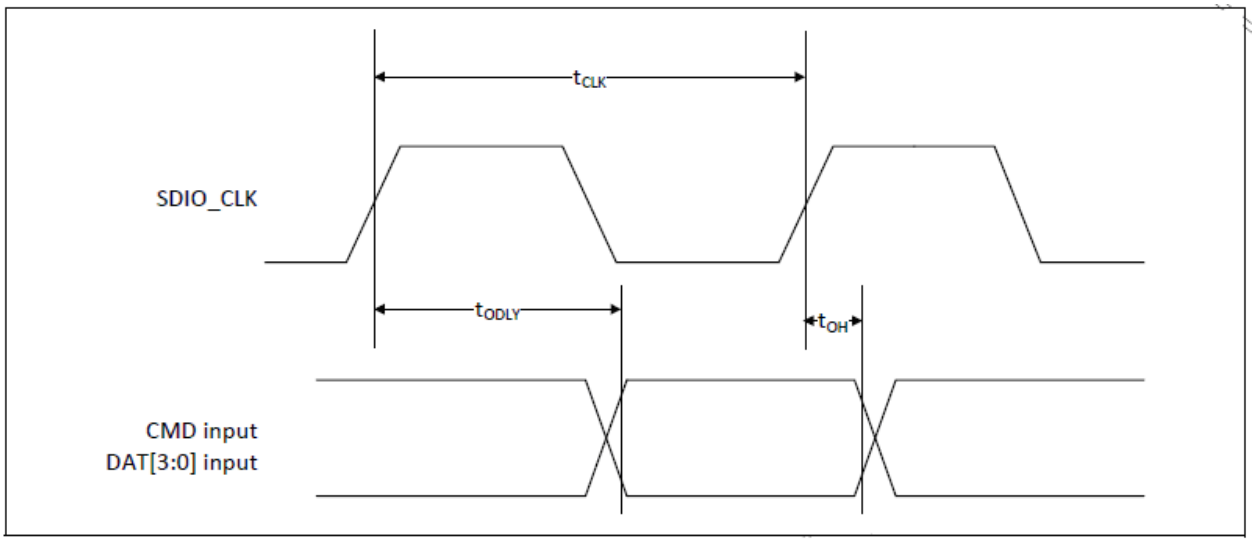


| Symbol | Minimum | Maximum | Unit | Comments |
|---|---|---|---|---|
| $t_{ODLY}$ | – | 7.5 | ns | $t_{CLK} \geq 10$ ns $C_L = 30$ pF using driver type B for SDR50 |
| $t_{ODLY}$ | – | 14.0 | ns | $t_{CLK} \geq 20$ ns $C_L = 40$ pF using for SDR12, SDR25 |
| $t_{OH}$ | 1.5 | – | ns | Hold time at the $t_{ODLY}$ (min) $C_L = 15$ pF |

Card output timing (SDR Modes 100MHz to 208MHz)

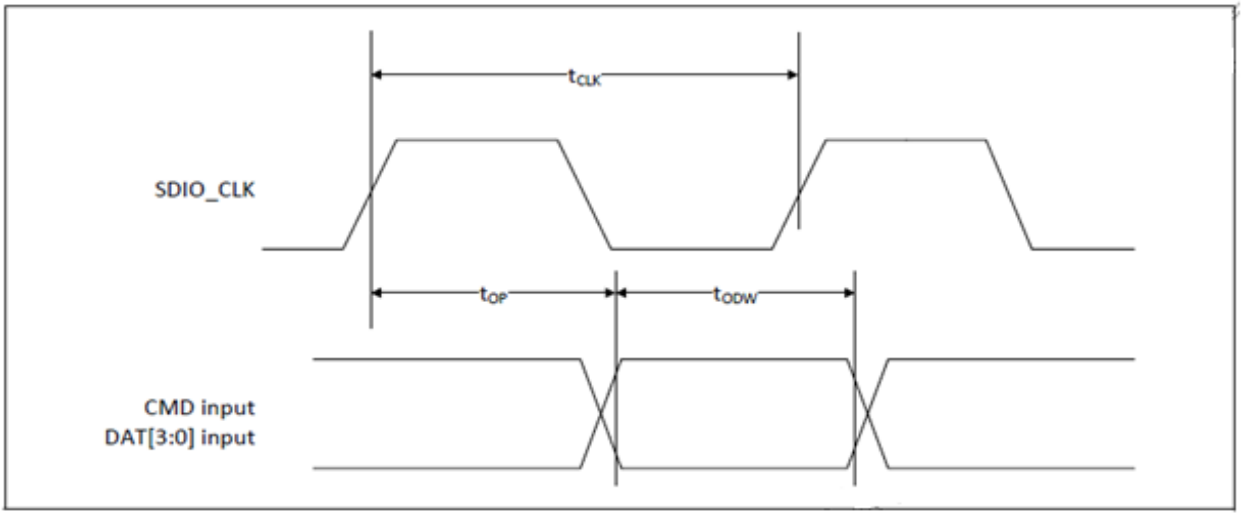

| Symbol | Minimum | Maximum | Unit | Comments |
|---|---|---|---|---|
| $t_{OP}$ | 0 | 2 | UI | Card output phase |
| $\Delta t_{OP}$ | −350 | +1550 | ps | Delay variation due to temp change after tuning |
| $t_{ODW}$ | 0.60 | – | UI | $t_{ODW}$=2.88 ns @208 MHz |

- $\Delta t_{OP}$ = +1550 ps for junction temperature of $\Delta t_{OP}$ = 90 degrees during operation
- $\Delta t_{OP}$ = −350 ps for junction temperature of $\Delta t_{OP}$ = −20 degrees during operation
- $\Delta t_{OP}$ = +2600 ps for junction temperature of $\Delta t_{OP}$ = −20 to +125 degrees during operation

**$\Delta t_{OP}$ Consideration for Variable Data Window (SDR 104 Mode)**

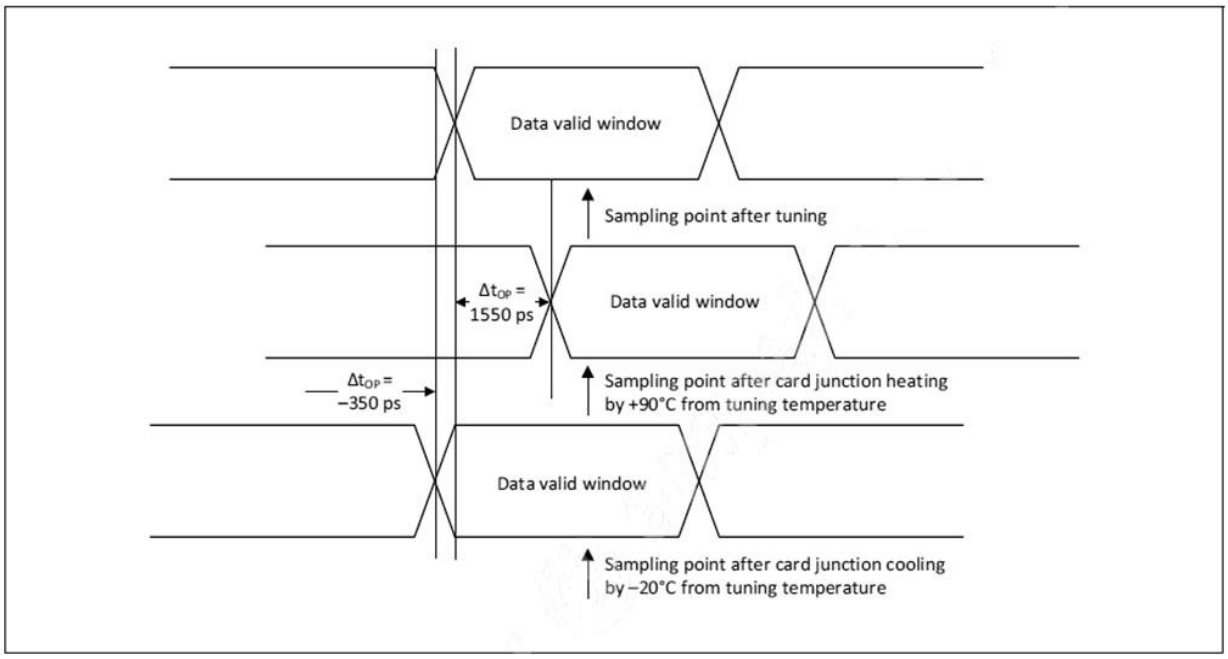

# SDIO Bus Timing Specifications in DDR50 Mode

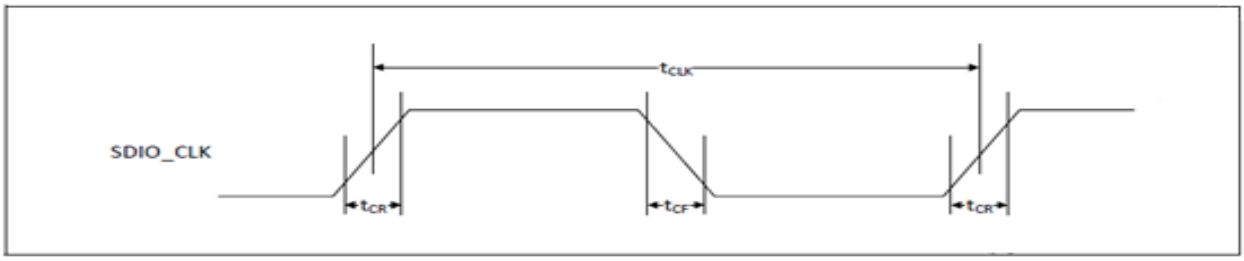


| Parameter | Symbol | Minimum | Maximum | Unit | Comments |
|---|---|---|---|---|---|
| – | $t_{CLK}$ | 20 | – | ns | DDR50 mode |
| – | $t_{CR}$,$t_{CF}$ | – | 0.2 × tCLK | ns | $t_{CR}$, $t_{CF}$ < 4.00 ns (max) @50 MHz, $C_{CARD}$ = 10 pF |
| Clock duty | – | 45 | 55 | % | – |

## Data Timing

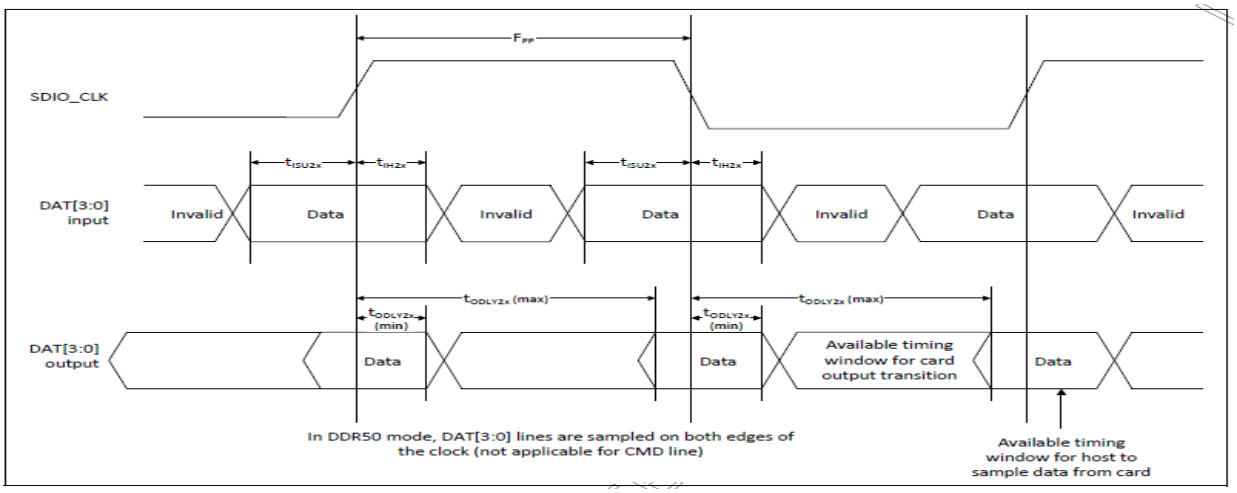


| Parameter | Symbol | Minimum | Maximum | Unit | Comments |
|---|---|---|---|---|---|
| ***Input CMD*** | | | | | |
| Input setup time | $t_{ISU}$ | 6 | – | ns | $C_{CARD}$ < 10 pF (1 Card) |
| Input hold time | $t_{IH}$ | 0.8 | – | ns | $C_{CARD}$ < 10 pF (1 Card) |
| ***Output CMD*** | | | | | |
| Output delay time | $t_{ODLY}$ | – | 13.7 | ns | $C_{CARD}$ < 30 pF (1 Card) |
| Output hold time | $t_{OH}$ | 1.5 | – | ns | $C_{CARD}$ < 15 pF (1 Card) |
| ***Input DAT*** | | | | | |
| Input setup time | $t_{ISU2x}$ | 3 | – | ns | $C_{CARD}$ < 10 pF (1 Card) |
| Input hold time | $t_{IH2x}$ | 0.8 | – | ns | $C_{CARD}$ < 10 pF (1 Card) |
| ***Output DAT*** | | | | | |
| Output delay time | $t_{ODLY2x}$ | – | 7.5 | ns | $C_{CARD}$ < 25 pF (1 Card) |
| Output hold time | $t_{ODLY2x}$ | 1.5 | – | ns | $C_{CARD}$ < 15 pF (1 Card) |

## 8.3 PCM Interface Description

The PCM Interface on the AP6281 can connect to linear PCM Codec devices in master or slave mode. In master mode, the AP6281 generates the PCM_CLK and PCM_SYNC signals, and in slave mode, these signals are provided by another master on the PCM interface and are inputs to the AP6281.The configuration of the PCM interface may be adjusted by the host through the use of vendor-specific HCI commands.

# Short Frame Sync, Master Modem

PCM Timing Diagram (Short Frame Sync, Master Mode)

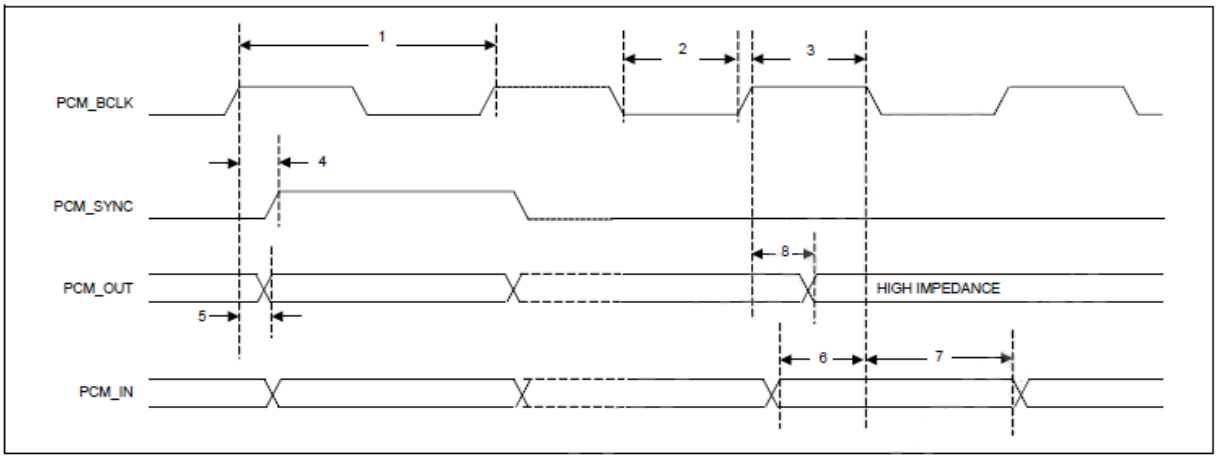


PCM Interface Timing Specifications (Short Frame Sync, Master Mode)

| Reference | Characteristics | Minimum | Typical | Maximum | Unit |
|---|---|---|---|---|---|
| 1 | PCM bit clock frequency | | – | 12 | MHz |
| 2 | PCM bit clock low | 41 | – | – | ns |
| 3 | PCM bit clock high | 41 | – | – | ns |
| 4 | PCM_SYNC delay | 0 | – | 25 | ns |
| 5 | PCM_OUT delay | 0 | – | 25 | ns |
| 6 | PCM_IN setup | 8 | – | – | ns |
| 7 | PCM_IN hold | 8 | – | – | ns |
| 8 | Delay from rising edge of PCM_BCLK during last bit period to PCM_OUT becoming high impedance | 0 | – | 25 | ns |

# Short Frame Sync, Slave Mode

PCM Timing Diagram (Short Frame Sync, Slave Mode)

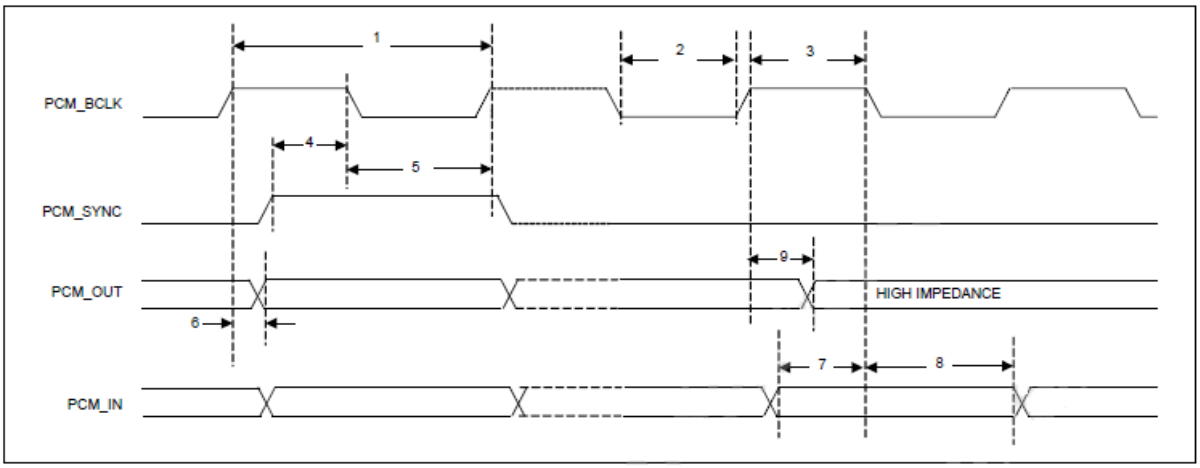


PCM Interface Timing Specifications (Short Frame Sync, Slave Mode)

| Reference | Characteristics | Minimum | Typical | Maximum | Unit |
|---|---|---|---|---|---|
| 1 | PCM bit clock frequency | – | – | 12 | MHz |
| 2 | PCM bit clock low | 41 | – | – | ns |
| 3 | PCM bit clock high | 41 | – | – | ns |
| 4 | PCM_SYNC setup | 8 | – | – | ns |
| 5 | PCM_SYNC hold | 8 | – | – | ns |
| 6 | PCM_OUT delay | 0 | – | 25 | ns |
| 7 | PCM_IN setup | 8 | – | – | ns |
| 8 | PCM_IN hold | 8 | – | – | ns |
| 9 | Delay from rising edge of PCM_BCLK during last bit period to PCM_OUT becoming high impedance | 0 | – | 25 | ns |

# Long Frame Sync, Master Mode

PCM Timing Diagram (Long Frame Sync, Master Mode)

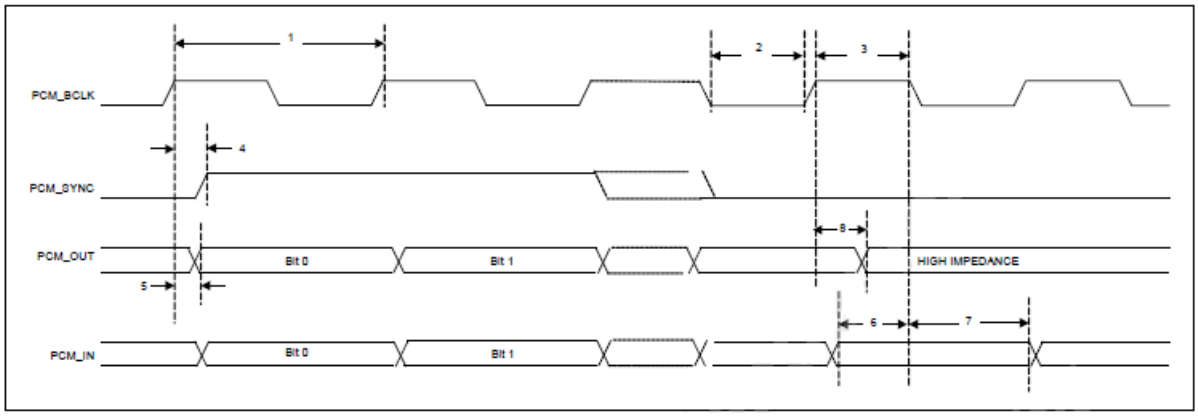


PCM Interface Timing Specifications (Long Frame Sync, Master Mode)

| Reference | Characteristics | Minimum | Typical | Maximum | Unit |
|---|---|---|---|---|---|
| 1 | PCM bit clock frequency | – | – | 12 | MHz |
| 2 | PCM bit clock low | 41 | – | – | ns |
| 3 | PCM bit clock high | 41 | – | – | ns |
| 4 | PCM_SYNC delay | 0 | – | 25 | ns |
| 5 | PCM_OUT delay | 0 | – | 25 | ns |
| 6 | PCM_IN setup | 8 | – | – | ns |
| 7 | PCM_IN hold | 8 | – | – | ns |
| 8 | Delay from rising edge of PCM_BCLK during last bit period to PCM_OUT becoming high impedance | 0 | – | 25 | ns |

## Long Frame Sync, Slave Mode

PCM Timing Diagram (Long Frame Sync, Slave Mode)

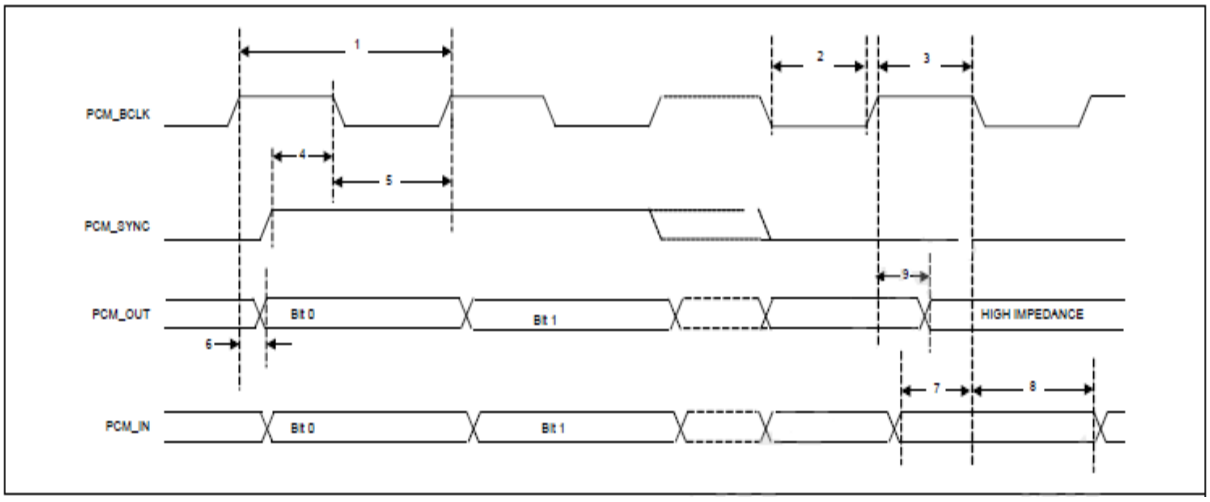


PCM Interface Timing Specifications (Long Frame Sync, Slave Mode)

| Reference | Characteristics | Minimum | Typical | Maximum | Unit |
|---|---|---|---|---|---|
| 1 | PCM bit clock frequency | – | – | 12 | MHz |
| 2 | PCM bit clock low | 41 | – | – | ns |
| 3 | PCM bit clock high | 41 | – | – | ns |
| 4 | PCM_SYNC setup | 8 | – | – | ns |
| 5 | PCM_SYNC hold | 8 | – | – | ns |
| 6 | PCM_OUT delay | 0 | – | 25 | ns |
| 7 | PCM_IN setup | 8 | – | – | ns |
| 8 | PCM_IN hold | 8 | – | – | ns |
| 9 | Delay from rising edge of PCM_BCLK during last bit period to PCM_OUT becoming high impedance | 0 | – | 25 | ns |

## Short Frame Sync, Burst Mode

PCM Burst Mode Timing (Receive Only, Short Frame Sync)

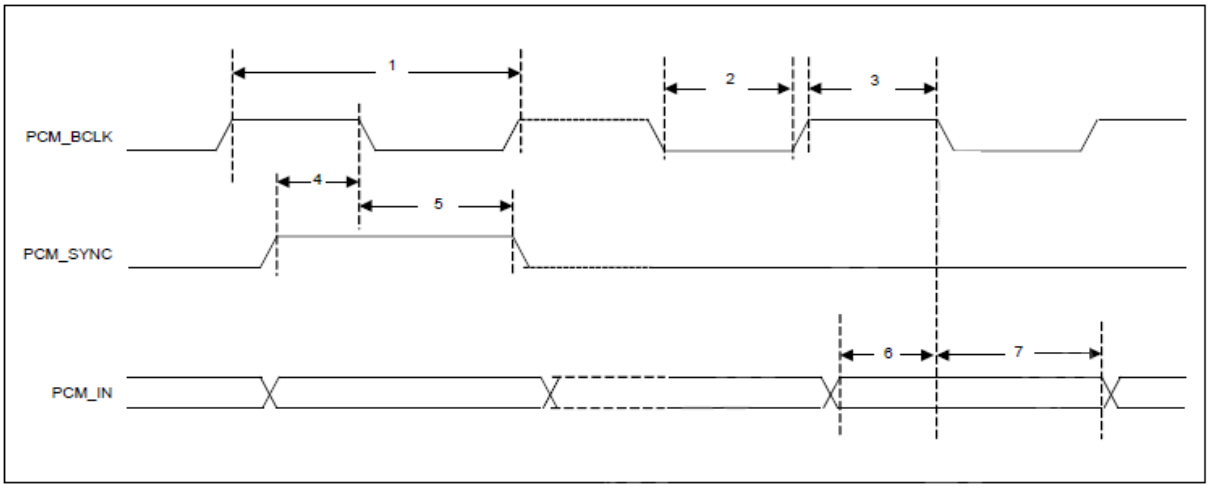


PCM Burst Mode (Receive Only, Short Frame Sync)

| Reference | Characteristics | Minimum | Typical | Maximum | Unit |
|---|---|---|---|---|---|
| 1 | PCM bit clock frequency | – | – | 24 | MHz |
| 2 | PCM bit clock low | 20.8 | – | – | ns |
| 3 | PCM bit clock high | 20.8 | – | – | ns |
| 4 | PCM_SYNC setup | 8 | – | – | ns |
| 5 | PCM_SYNC hold | 8 | – | – | ns |
| 6 | PCM_IN setup | 8 | – | – | ns |
| 7 | PCM_IN hold | 8 | – | – | ns |

# Long Frame Sync, Burst Mode

PCM Burst Mode Timing (Receive Only, Long Frame Sync)

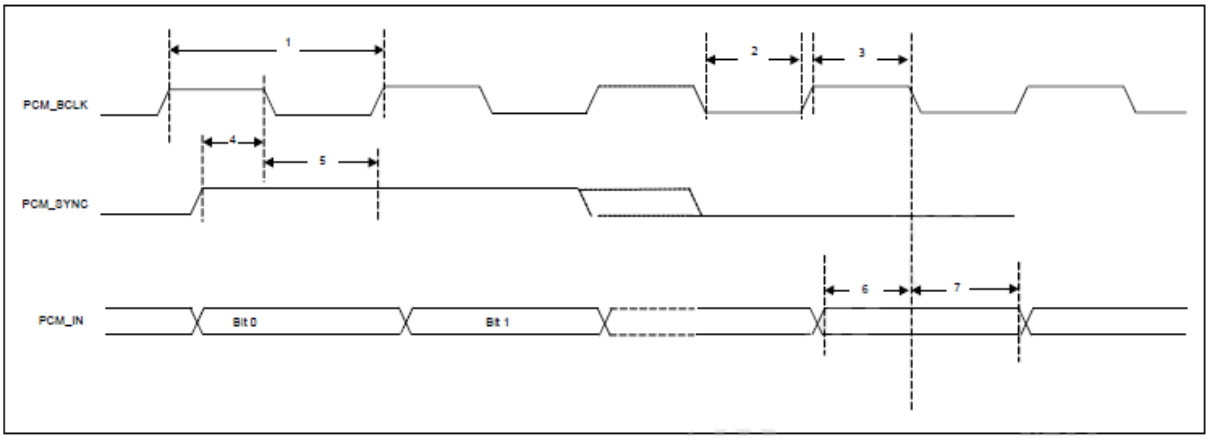


PCM Burst Mode (Receive Only, Long Frame Sync)

| Reference | Characteristics | Minimum | Typical | Maximum | Unit |
|---|---|---|---|---|---|
| 1 | PCM bit clock frequency | – | – | 24 | MHz |
| 2 | PCM bit clock low | 20.8 | – | – | ns |
| 3 | PCM bit clock high | 20.8 | – | – | ns |
| 4 | PCM_SYNC setup | 8 | – | – | ns |
| 5 | PCM_SYNC hold | 8 | – | – | ns |
| 6 | PCM_IN setup | 8 | – | – | ns |
| 7 | PCM_IN hold | 8 | – | – | ns |

## 8.4 UART Interface Description

The UART is a standard 4-wire interface (RX, TX, RTS, and CTS) with adjustable baud rates from 9600 bps to 4.0 Mbps. The interface features an automatic baud rate detection capability that returns a baud rate selection. Alternatively, the baud rate may be selected through a vendor-specific UART HCI command.

UART has a 1040-byte receive FIFO and a 1040-byte transmit FIFO to support EDR. Access to the FIFOs is conducted through the AHB interface through either DMA or the CPU. The UART supports the Bluetooth 5.0 UART HCI specification: H4, a custom Extended H4, and H5. The default baud rate is 115.2 Kbaud.

The UART supports the 3-wire H5 UART transport, as described in the Bluetooth specification (Three-wire UART Transport Layer). Compared to H4, the H5 UART transport reduces the number of signal lines required by eliminating the CTS and RTS signals.

The UART can perform XON/XOFF flow control and includes hardware support for the Serial Line Input Protocol (SLIP). It can also perform wake-on activity. For example, activity on the RX or CTS inputs can wake the chip from a sleep state.

Normally, the UART baud rate is set by a configuration record downloaded after device reset, or by automatic baud rate detection, and the host does not need to adjust the baud rate. Support for changing the baud rate during normal HCI UART operation is included through a vendor-specific command that allows the host to adjust the contents of the baud rate registers. The UARTs operate correctly with the host UART as long as the combined baud rate error of the two devices is within ±2%.

Example of Common Baud Rates

| Desired Rate | Actual Rate | Error (%) |
|---|---|---|
| 4000000 | 4000000 | 0.00 |
| 3692000 | 3692308 | 0.01 |
| 3000000 | 3000000 | 0.00 |
| 2000000 | 2000000 | 0.00 |
| 1500000 | 1500000 | 0.00 |
| 1444444 | 1454544 | 0.70 |
| 921600 | 923077 | 0.16 |
| 460800 | 461538 | 0.16 |
| 230400 | 230796 | 0.17 |
| 115200 | 115385 | 0.16 |
| 57600 | 57692 | 0.16 |
| 38400 | 38400 | 0.00 |
| 28800 | 28846 | 0.16 |
| 19200 | 19200 | 0.00 |
| 14400 | 14423 | 0.16 |
| 9600 | 9600 | 0.00 |

## UART Timing

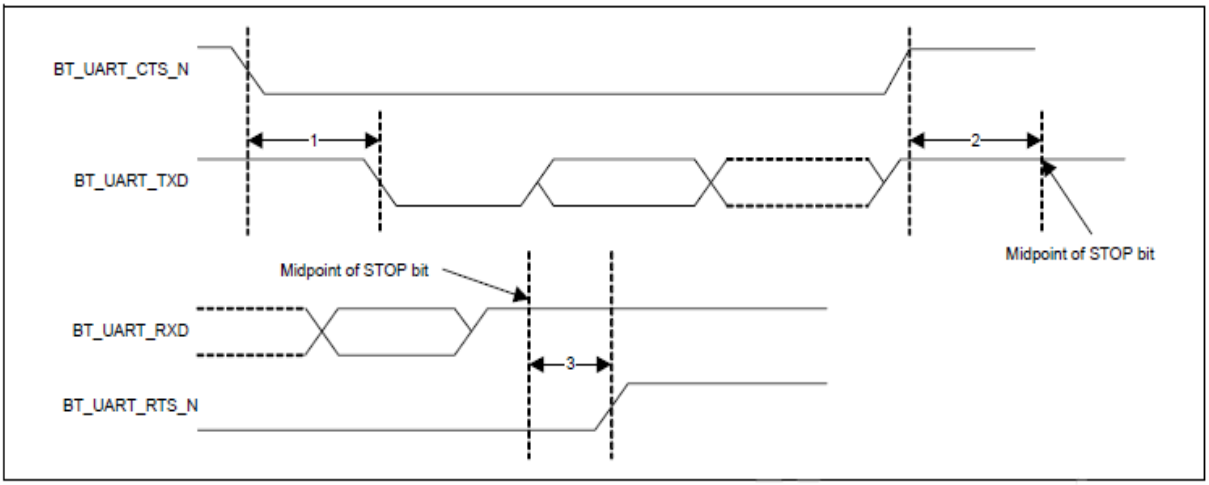


## UART Timing Specifications

| Ref | Characteristics | Min. | Typ. | Max. | Unit |
|---|---|---|---|---|---|
| 1 | Delay time, BT_UART_CTS_N low to BT_UART_TXD valid | – | – | 1.5 | Bit periods |
| 2 | Setup time, BT_UART_CTS_N high before midpoint of stop bit | – | – | 0.5 | Bit periods |
| 3 | Delay time, midpoint of stop bit to BT_UART_RTS_N high | – | – | 0.5 | Bit periods |

# 9. Package Information

## 9.1 Tray box

BOX : 100 PCS (100 PCS/Try )

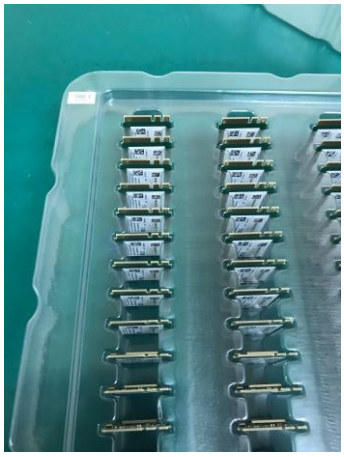

## 9.2 Carton

Carton: 400 PCS (Box*4/Carton)